SOFIA BLOCK

REVISIONS				
ZONE	LTR	DESCRIPTION	DATE	APPROVED

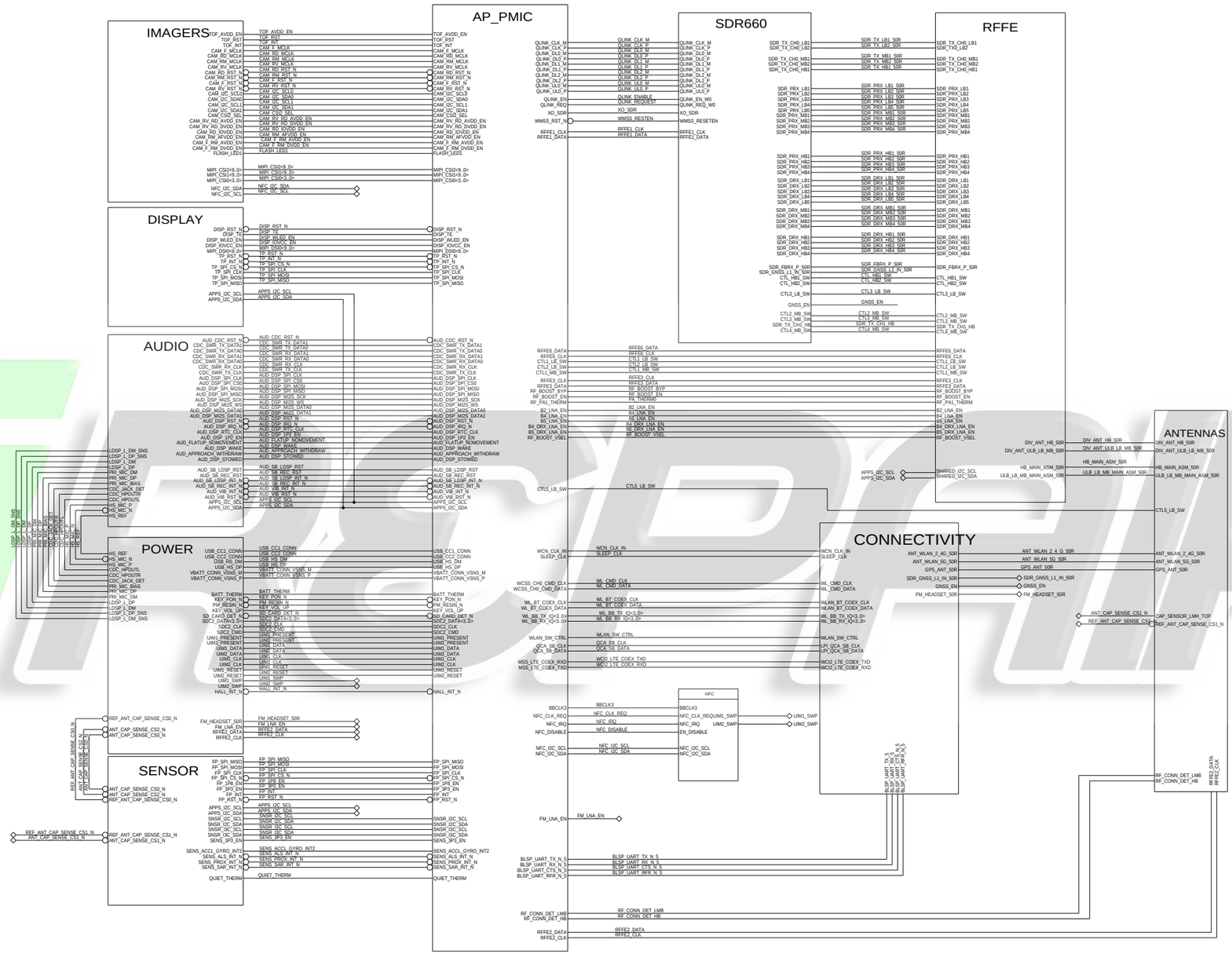

APPROVALS	
ENGINEER: MOTOROLA	
LAST MODIFIED BY: MOTOROLA Wed Sep 18 15:18:37 2019	

MOTOROLA CONFIDENTIAL RESTRICTED

THE DRAWING ON THIS PRINT AND INFORMATION THEREIN IS ARE PROPRIETARY TO MOTOROLA AND SHALL NOT BE USED OR DISCUSSED IN WHOLE OR IN PART WITHOUT MOTOROLA'S CONSENT

© COPYRIGHT MOTOROLA. THIS DOCS CONTAINS UNPUBLISHED INFORMATION

MOTOROLA MOBILITY CONFIDENTIAL RESTRICTED-MDB TRACKED TRACKEDANDBLOCKED

MOTOROLA MOBILE DEVICES

BLOCK TITLE: sr28c55256_a_191107

D	PROJECT NAME sr28c55256_a_191107.cpm	REV 03
	CAD FILE NAME:	PAGE 1 OF 63

SOFIA ME/SHIELDS

REFERENCE DESIGNATOR RANGES BY BLOCK

8000 - 8049: ANTENNA

500 - 699: POWER

700 - 799: AMPS

800 - 899: USER INPUT

1000-2999: SDM660 + PM660 + PM660A

3000-3199: WTR5975

4000-4499: CONNECTIVITY

4500-4999: AUDIO FE

5000-5499: DISPLAY

5500-5999: IMAGERS

6000-6999: XMCS

7000-8999: RFFE

METAL SCREW

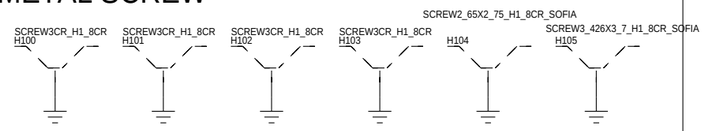

LOCATING SCREW

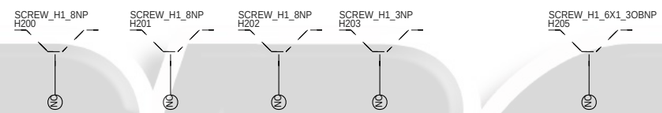

SHIELDS

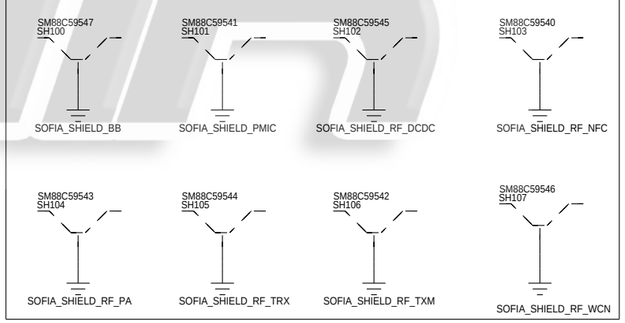

GROUND CONTACTS FROM PCB TO FRONT

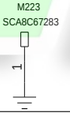

APPROVALS
MOTOROLA MOBILITY CONFIDENTIAL RESTRICTED-MDB TRACKED TRACKEDANDBLOCKED

MOTOROLA
MOBILE DEVICES

ENGINEER: MOTOROLA

LAST MODIFIED BY: MOTOROLA
Tue Oct 22 10:30:13 2019

BLOCK TITLE:
sr28c55256_a_191107

MOTOROLA CONFIDENTIAL RESTRICTED
THE DRAWING ON THIS PRINT AND INFORMATION THEREWITH ARE PROPRIETARY TO MOTOROLA AND SHALL NOT BE USED OR DISCUSSED IN WHOLE OR IN PART WITHOUT MOTOROLA'S CONSENT.
© COPYRIGHT, MOTOROLA. THIS DOES NOT IMPLY PUBLICATION

	PROJECT NAME	REV
B	sr28c55256_a_191107.cpm	03

CAD FILE NAME:

IRREPAIR

8000:antennas

REF 8000-8049

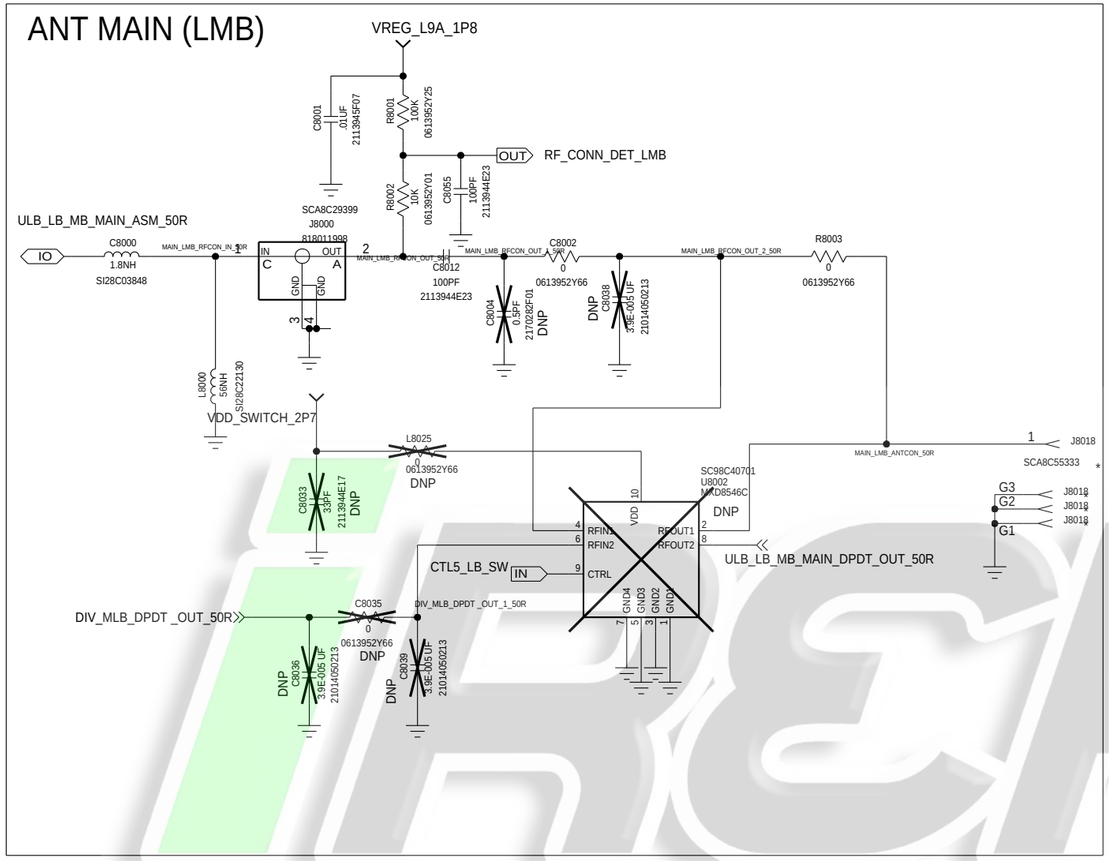

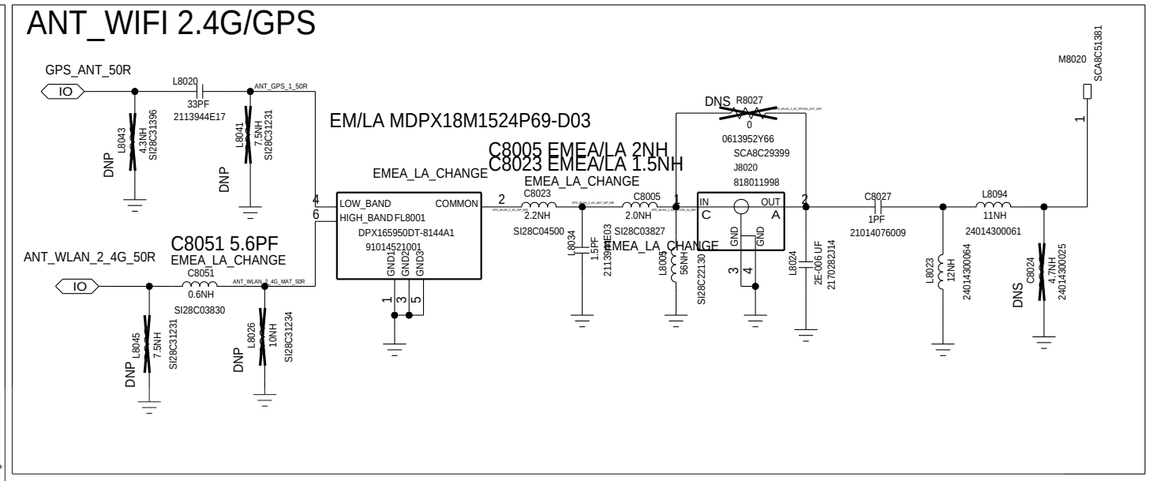

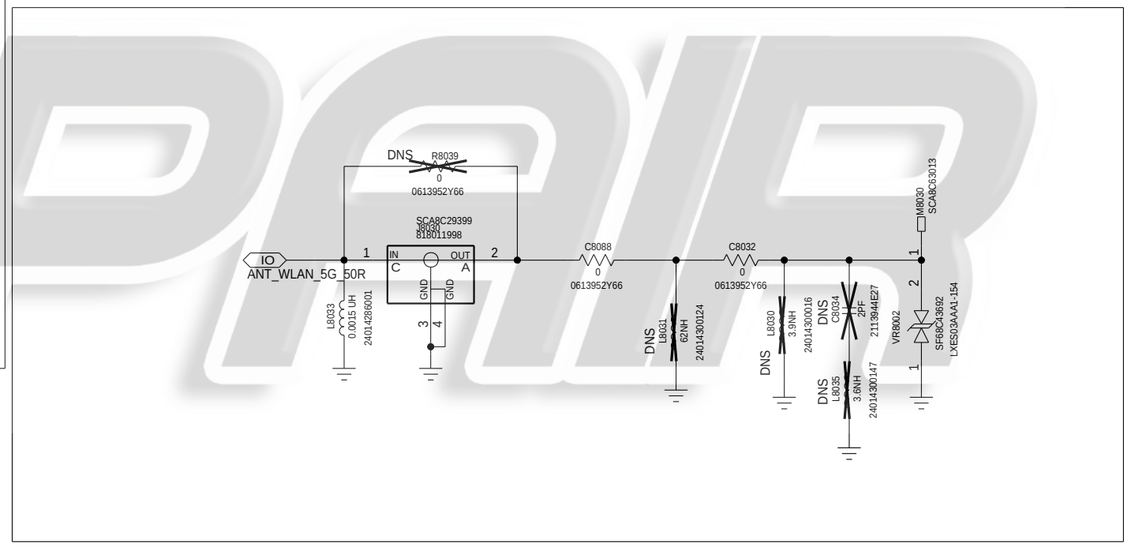

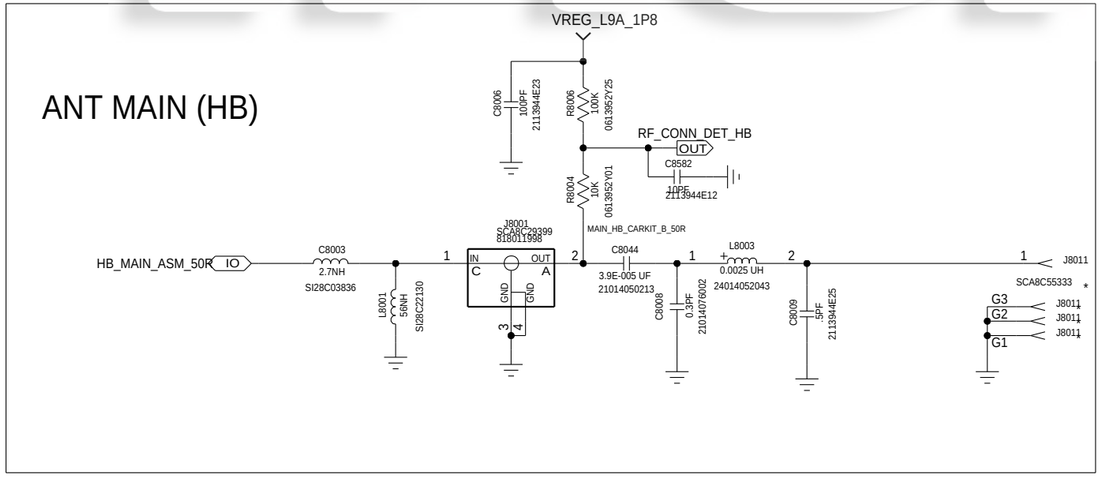

APPROVALS	MOTOROLA MOBILE DEVICES	
ENGINEER:	BLOCK TITLE: antennas	
LAST MODIFIED BY: Wed Oct 23 10:34:14 2019		
MOTOROLA CONFIDENTIAL RESTRICTED	B — PROJECT NAME: sr28c55256_a_191107.cpm	REV: 03
CAD FILE NAME:		PAGE 3 OF 63

THE DRAWING ON THIS PRINT AND INFORMATION THEREWITH ARE PROPRIETARY TO MOTOROLA AND SHALL NOT BE USED OR DISCUSSED IN WHOLE OR IN PART WITHOUT MOTOROLA'S CONSENT.
© COPYRIGHT, MOTOROLA. THIS DOES NOT IMPLY PUBLICATION

8050: ANT_TUNER_QAT3555

REF 8050-8099

ANT DRX MLB

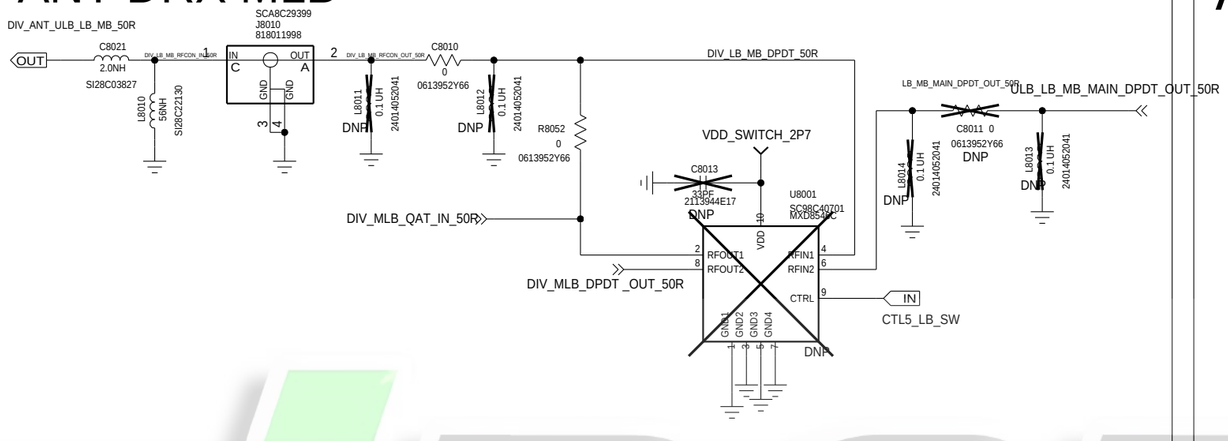

ANT DRX HB

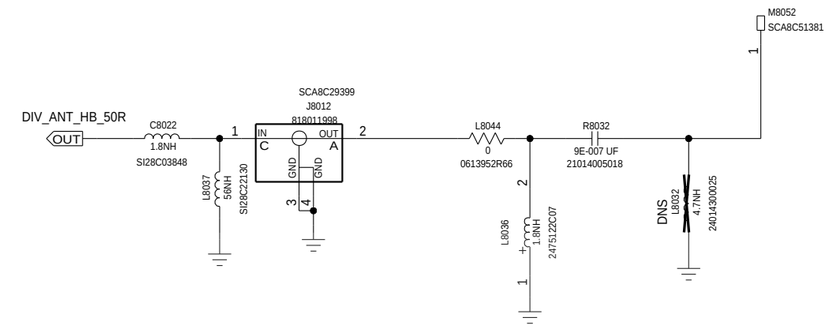

DIV MLB ANT TUNER

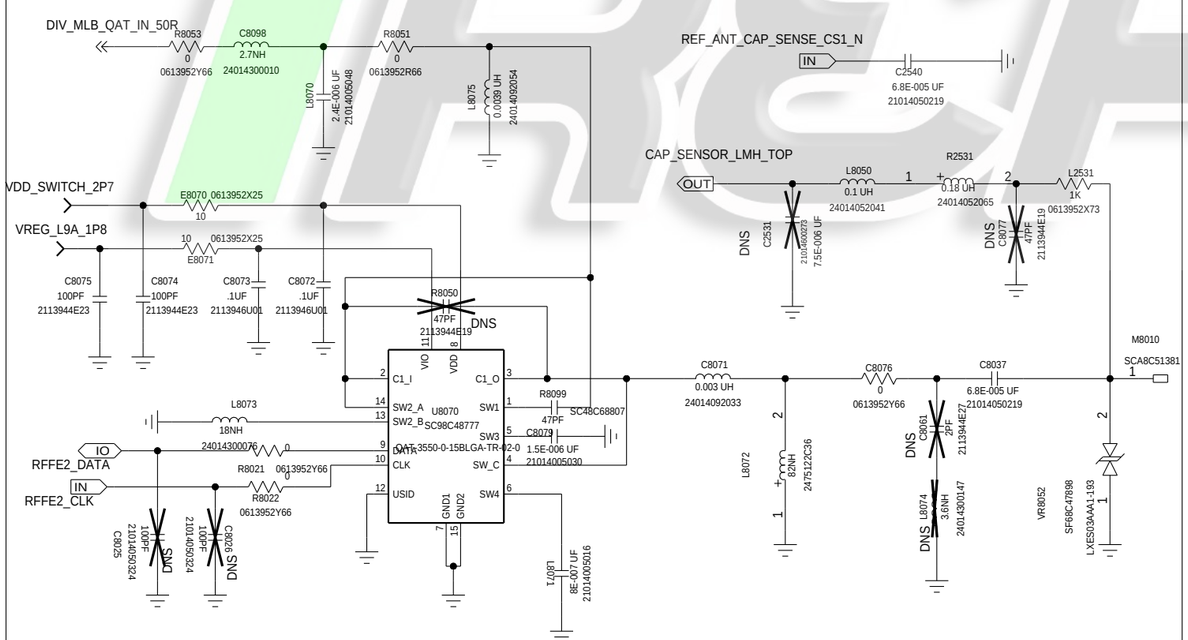

APPROVALS	MOTOROLA MOBILE DEVICES	
ENGINEER:	BLOCK TITLE: antennas	
LAST MODIFIED BY: Tue Oct 22 14:17:57 2019		
MOTOROLA CONFIDENTIAL RESTRICTED	PROJECT NAME: B sr28c55256_a_191107.cpm	REV 03
THE DRAWING ON THIS PRINT AND INFORMATION THEREWITH ARE PROPRIETARY TO MOTOROLA AND SHALL NOT BE USED OR DISCUSSED IN WHOLE OR IN PART WITHOUT MOTOROLA'S CONSENT. © COPYRIGHT, MOTOROLA. THIS DOES NOT IMPLY PUBLICATION	CAD FILE NAME:	PAGE 4 OF 63

REPAIR

SDR660: POWER

REF 3000-3099

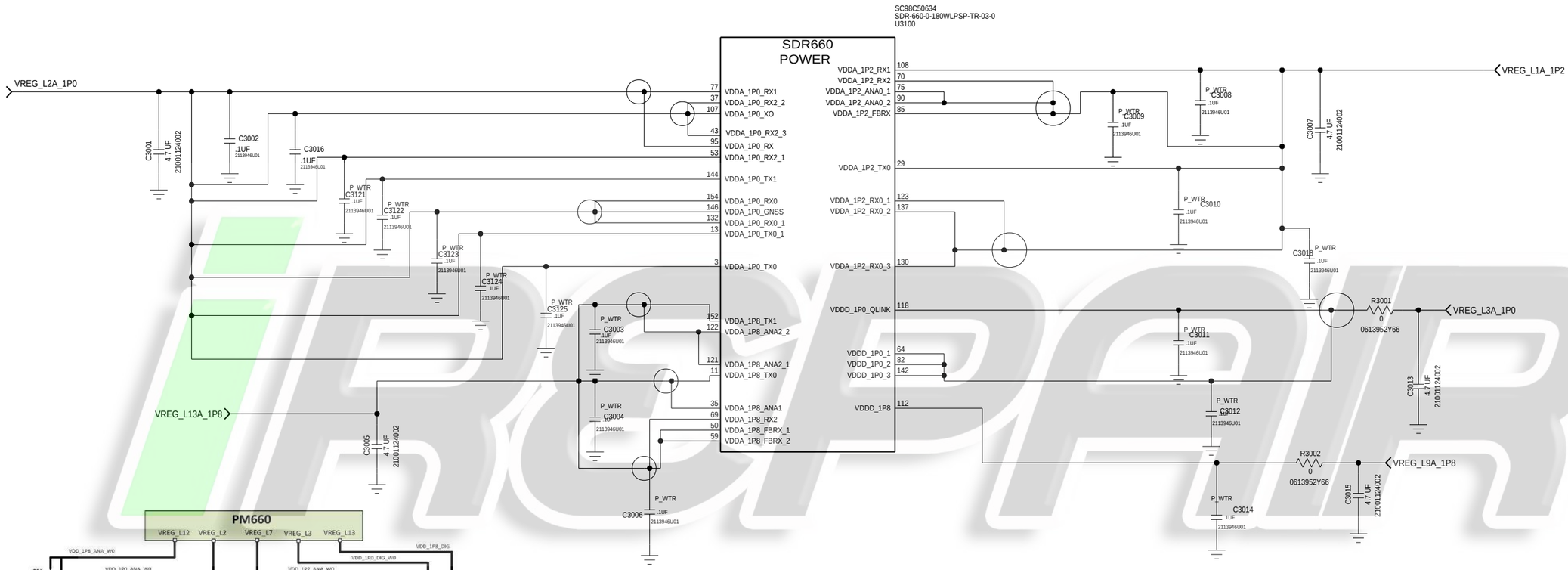

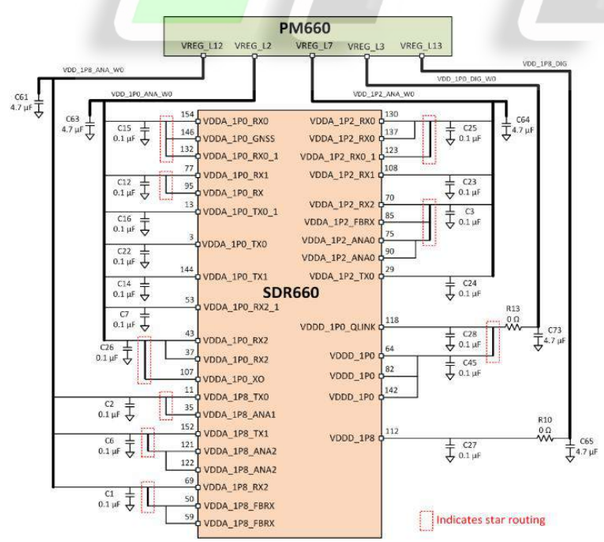

CIRCLE PRESENT SDR660 POWER SUPPLY STAR ROUTING

APPROVALS	MOTOROLA MOBILE DEVICES	
ENGINEER:	BLOCK TITLE: blk_sdr660	
LAST MODIFIED BY: Thu Aug 01 15:53:31 2019		
MOTOROLA CONFIDENTIAL RESTRICTED	PROJECT NAME: 8290_5256_a_191107.cpm	REV: 03
THE DRAWING ON THIS PRINT AND INFORMATION THEREWITH ARE PROPRIETARY TO MOTOROLA AND SHALL NOT BE USED OR DISCUSSED IN WHOLE OR IN PART WITHOUT MOTOROLA'S CONSENT. © COPYRIGHT, MOTOROLA. THIS DOES NOT IMPLY PUBLICATION	CAD FILE NAME:	PAGE 5 OF 63

iREPAIR

SDR660: TX/PWR/GROUND

REF 3100-3199

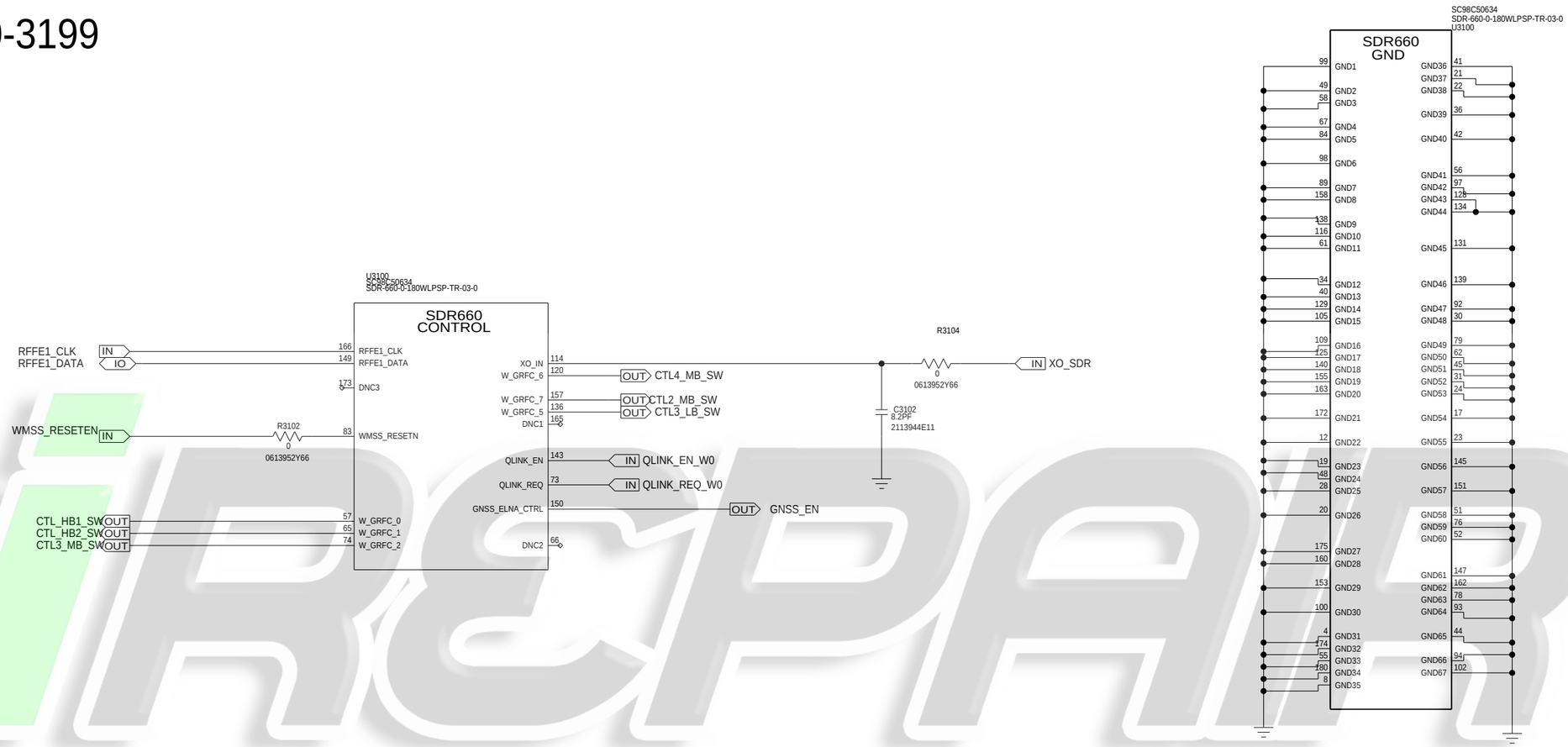

APPROVALS	MOTOROLA MOBILE DEVICES
ENGINEER:	BLOCK TITLE: blk_sdr660
LAST MODIFIED BY: Wed Aug 07 09:30:13 2019	
MOTOROLA CONFIDENTIAL RESTRICTED	B — PROJECT NAME: 8250_5256_a_191107.cpm — REV: 03
THE DRAWING ON THIS PRINT AND INFORMATION THEREWITH ARE PROPRIETARY TO MOTOROLA AND SHALL NOT BE USED OR DISCUSSED IN WHOLE OR IN PART WITHOUT MOTOROLA'S CONSENT. © COPYRIGHT, MOTOROLA. THIS DOES NOT IMPLY PUBLICATION	CAD FILE NAME: — PAGE 6 OF 63

iRepair

SDR660: PRX/DRX/GPS

REF 3200-3299

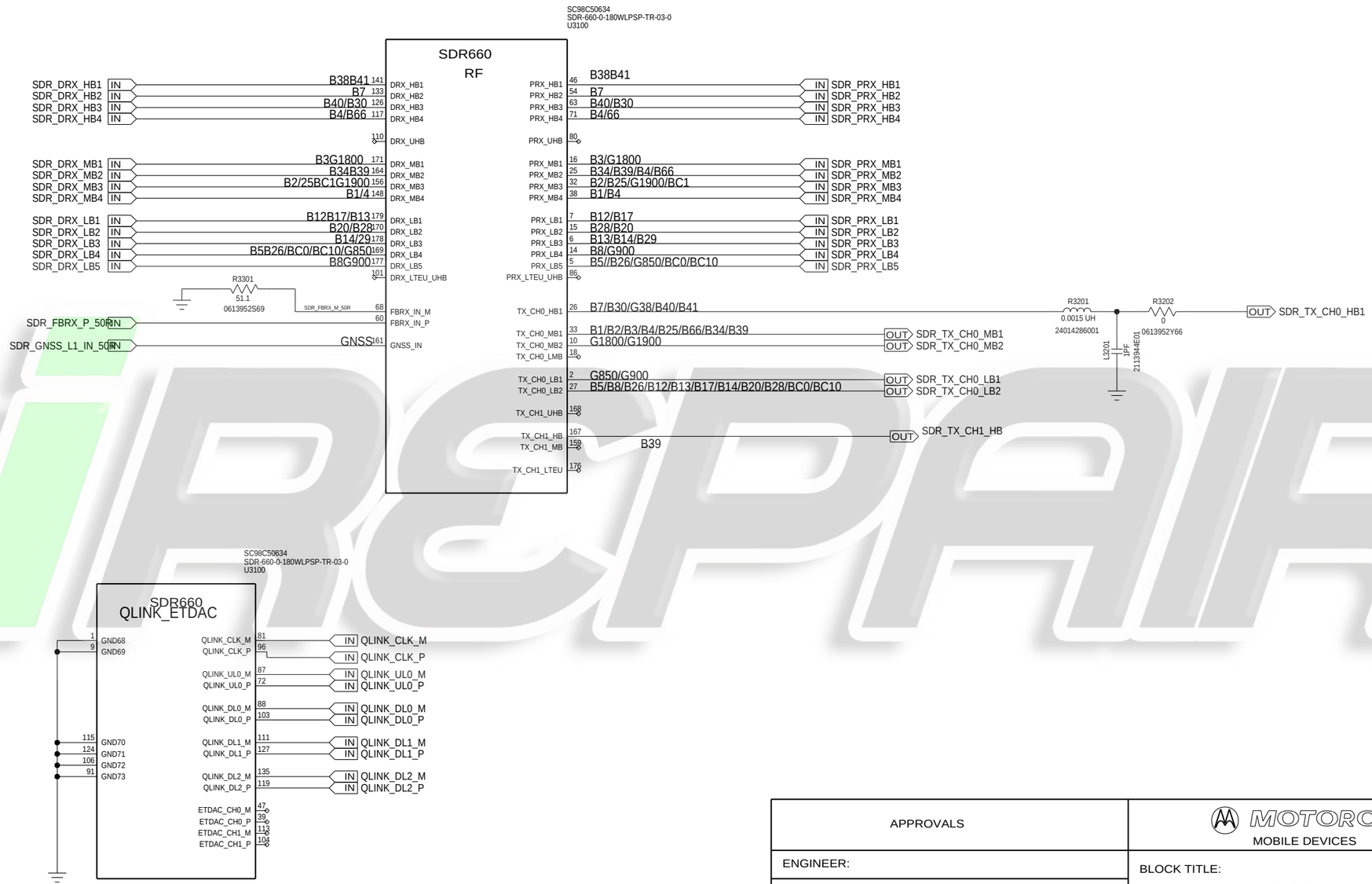

APPROVALS	MOTOROLA MOBILE DEVICES
ENGINEER:	BLOCK TITLE: blk_sdr660
LAST MODIFIED BY: Thu Aug 01 15:53:32 2019	
MOTOROLA CONFIDENTIAL RESTRICTED	B — PROJECT NAME: 8278_55256_a_191107.cpm — REV: 03
THE DRAWING ON THIS PRINT AND INFORMATION THEREWITH ARE PROPRIETARY TO MOTOROLA AND SHALL NOT BE USED OR DISCUSSED IN WHOLE OR IN PART WITHOUT MOTOROLA'S CONSENT. © COPYRIGHT, MOTOROLA. THIS DOES NOT IMPLY PUBLICATION	CAD FILE NAME: — PAGE 7 OF 63

iRepair

RFFE:TXM_SKY77928-21

REF 7000-7099

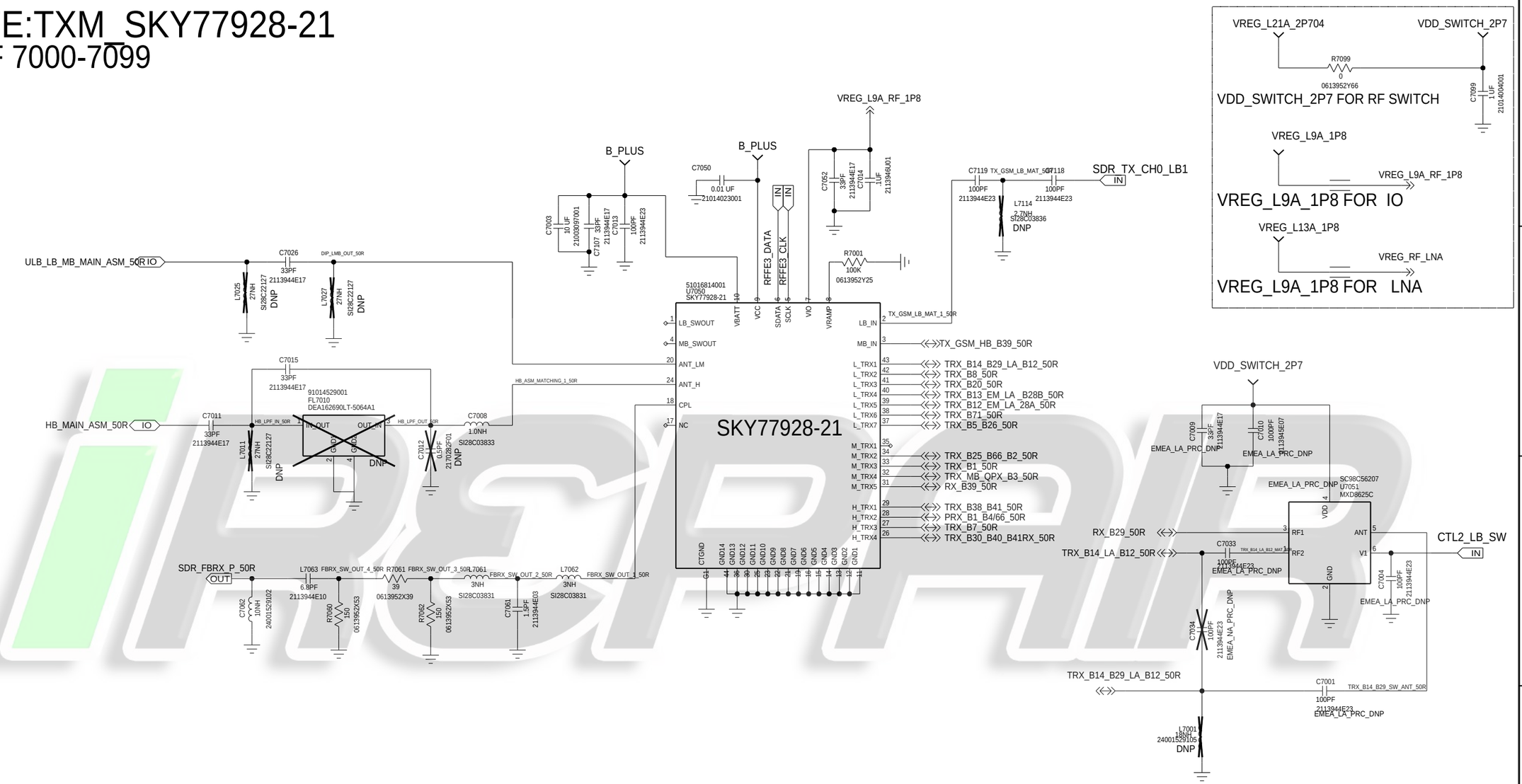

APPROVALS	MOTOROLA MOBILE DEVICES
ENGINEER:	BLOCK TITLE: rffe
LAST MODIFIED BY: Thu Aug 01 15:53:24 2019	
MOTOROLA CONFIDENTIAL RESTRICTED	B — PROJECT NAME: sr28c55256_a_191107.cpm — REV: 03
THE DRAWING ON THIS PRINT AND INFORMATION THEREWITH ARE PROPRIETARY TO MOTOROLA AND SHALL NOT BE USED OR DISCUSSED IN WHOLE OR IN PART WITHOUT MOTOROLA'S CONSENT. © COPYRIGHT, MOTOROLA. THIS DOES NOT IMPLY PUBLICATION	CAD FILE NAME: — PAGE 8 OF 63

iRepair

REF 7100-7149
RFFE:SKY77643

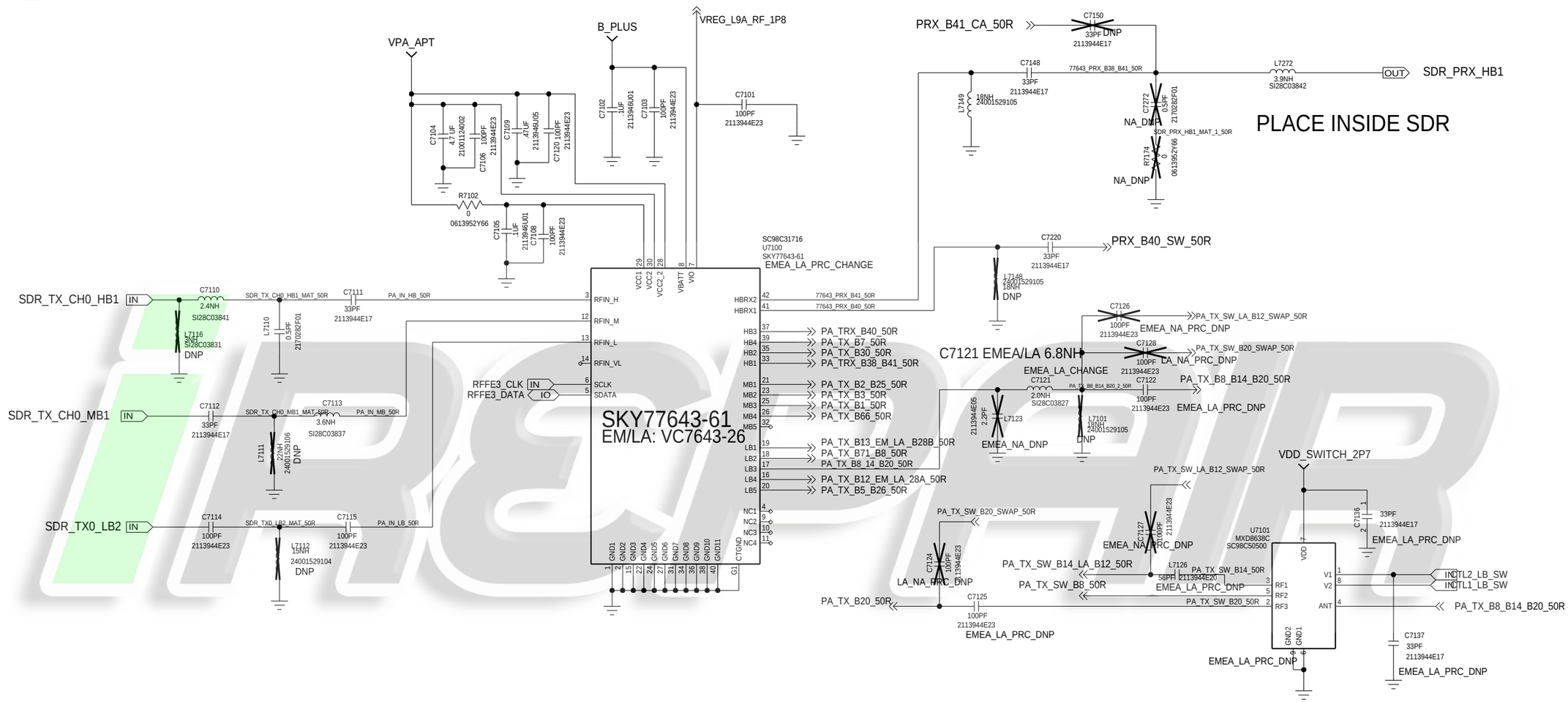

APPROVALS	MOTOROLA MOBILE DEVICES	
ENGINEER:	BLOCK TITLE: rffe	
LAST MODIFIED BY: Thu Nov 07 10:25:23 2019		
MOTOROLA CONFIDENTIAL RESTRICTED	B	PROJECT NAME: sr28c55256_a_191107.cpm — REV: 03
THE DRAWING ON THIS PRINT AND INFORMATION THEREWITH ARE PROPRIETARY TO MOTOROLA AND SHALL NOT BE USED OR DISCUSSED IN WHOLE OR IN PART WITHOUT MOTOROLA'S CONSENT. © COPYRIGHT, MOTOROLA. THIS DOES NOT IMPLY PUBLICATION	CAD FILE NAME:	PAGE 9 OF 63

RFFE:HB_TRX_B7
REF 7150-7199

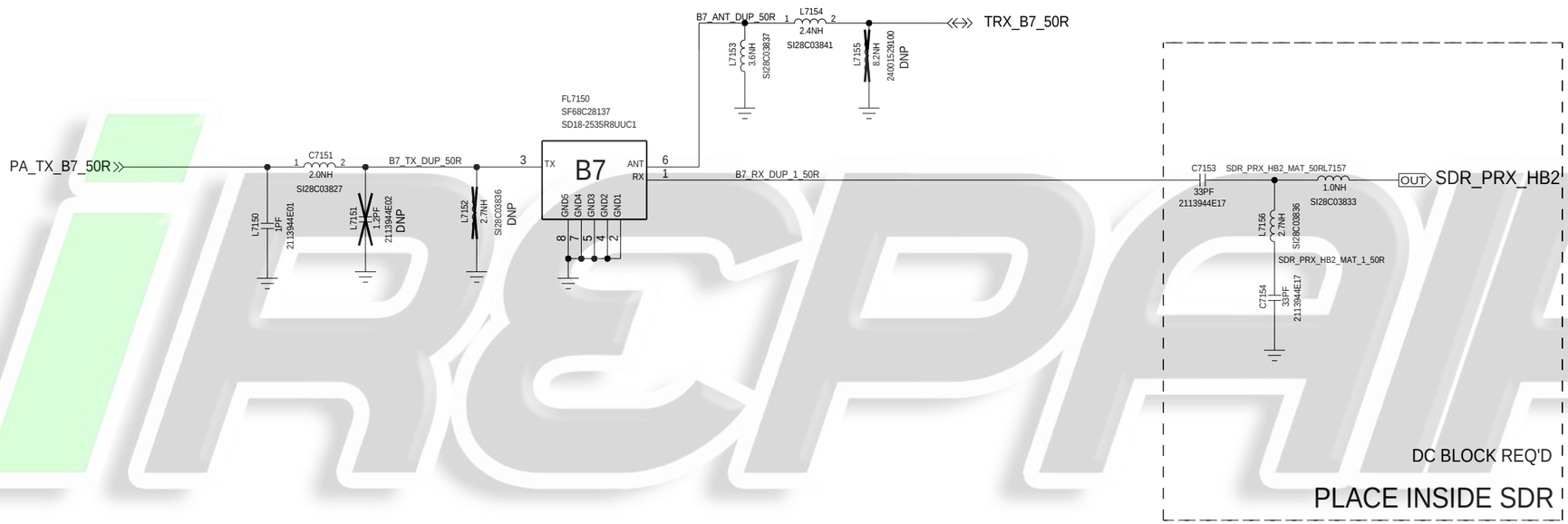

APPROVALS	MOTOROLA MOBILE DEVICES
ENGINEER:	BLOCK TITLE: rffe
LAST MODIFIED BY: Thu Aug 01 15:53:25 2019	
MOTOROLA CONFIDENTIAL RESTRICTED	B — PROJECT NAME: sr28c55256_a_191107.cpm — REV: 03
THE DRAWING ON THIS PRINT AND INFORMATION THEREWITH ARE PROPRIETARY TO MOTOROLA AND SHALL NOT BE USED OR DISCUSSED IN WHOLE OR IN PART WITHOUT MOTOROLA'S CONSENT. © COPYRIGHT, MOTOROLA. THIS DOES NOT IMPLY PUBLICATION	CAD FILE NAME: — PAGE 10 OF 63

iRepair

RFFE:HB_TRX_B30_B40_B41
REF 7200-7299

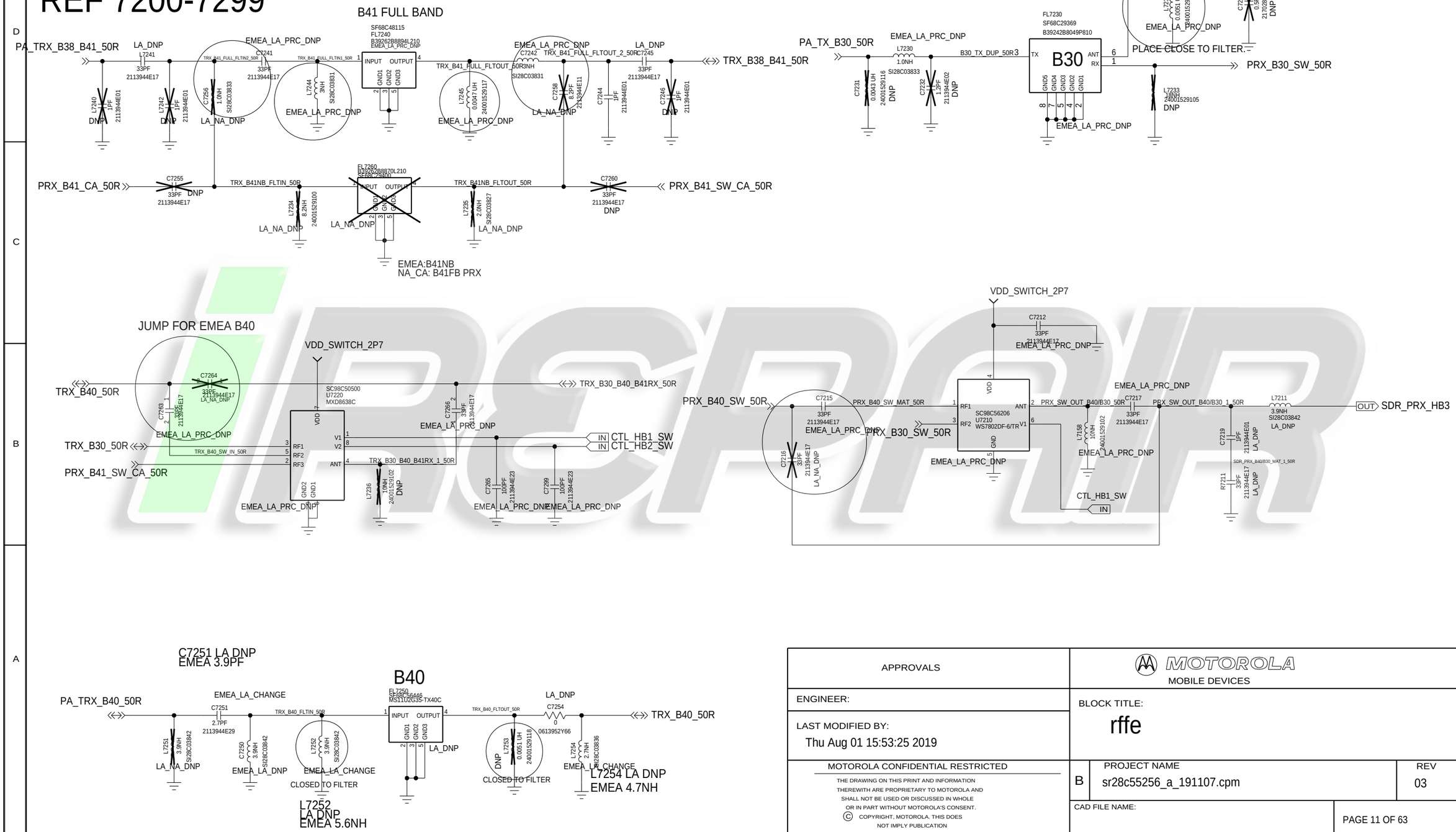

APPROVALS	MOTOROLA MOBILE DEVICES	
ENGINEER:	BLOCK TITLE: rffe	
LAST MODIFIED BY: Thu Aug 01 15:53:25 2019		
MOTOROLA CONFIDENTIAL RESTRICTED	PROJECT NAME: sr28c55256_a_191107.cpm	REV: 03
	CAD FILE NAME:	PAGE 11 OF 63

THE DRAWING ON THIS PRINT AND INFORMATION THEREWITH ARE PROPRIETARY TO MOTOROLA AND SHALL NOT BE USED OR DISCUSSED IN WHOLE OR IN PART WITHOUT MOTOROLA'S CONSENT.
© COPYRIGHT, MOTOROLA. THIS DOES NOT IMPLY PUBLICATION

RFFE:MB_TRX_B1_B3
REF 7350-7399

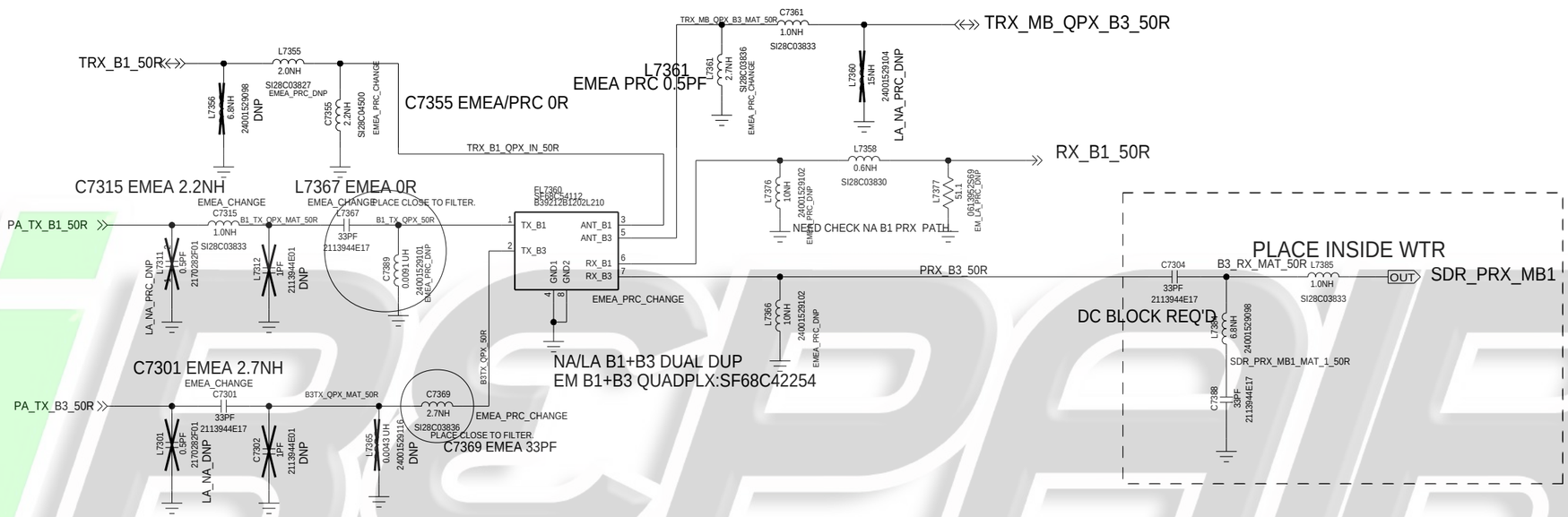

APPROVALS	MOTOROLA MOBILE DEVICES
ENGINEER:	BLOCK TITLE: rffe
LAST MODIFIED BY: Thu Aug 01 15:53:26 2019	
MOTOROLA CONFIDENTIAL RESTRICTED	B — PROJECT NAME: sr28c55256_a_191107.cpm — REV: 03
	CAD FILE NAME: — PAGE 12 OF 63

THE DRAWING ON THIS PRINT AND INFORMATION THEREWITH ARE PROPRIETARY TO MOTOROLA AND SHALL NOT BE USED OR DISCUSSED IN WHOLE OR IN PART WITHOUT MOTOROLA'S CONSENT.
© COPYRIGHT, MOTOROLA. THIS DOES NOT IMPLY PUBLICATION

RFFE:MB_TRX_B2/25_B4/66
REF 7400-7450

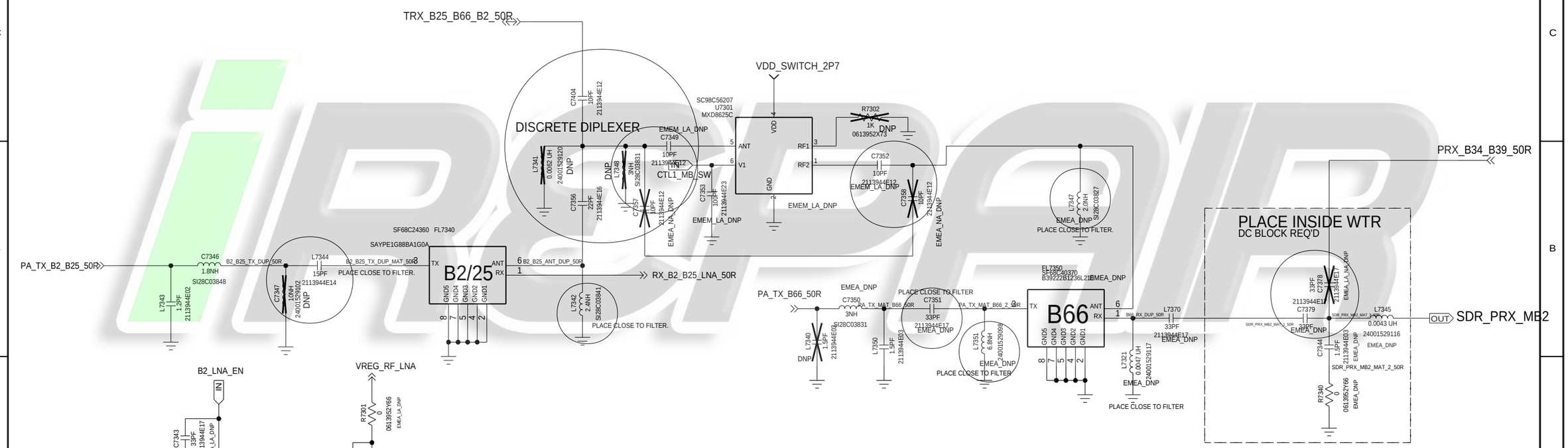

APPROVALS	MOTOROLA MOBILE DEVICES
ENGINEER:	BLOCK TITLE: rffe
LAST MODIFIED BY: Mon Aug 26 15:12:33 2019	
MOTOROLA CONFIDENTIAL RESTRICTED	B — PROJECT NAME: sr28c55256_a_191107.cpm — REV: 03
THE DRAWING ON THIS PRINT AND INFORMATION THEREWITH ARE PROPRIETARY TO MOTOROLA AND SHALL NOT BE USED OR DISCUSSED IN WHOLE OR IN PART WITHOUT MOTOROLA'S CONSENT.	CAD FILE NAME:
© COPYRIGHT, MOTOROLA. THIS DOES NOT IMPLY PUBLICATION	PAGE 13 OF 63

RFFE:MB_PRX_B4/66_B34_B39
REF 7300-7399

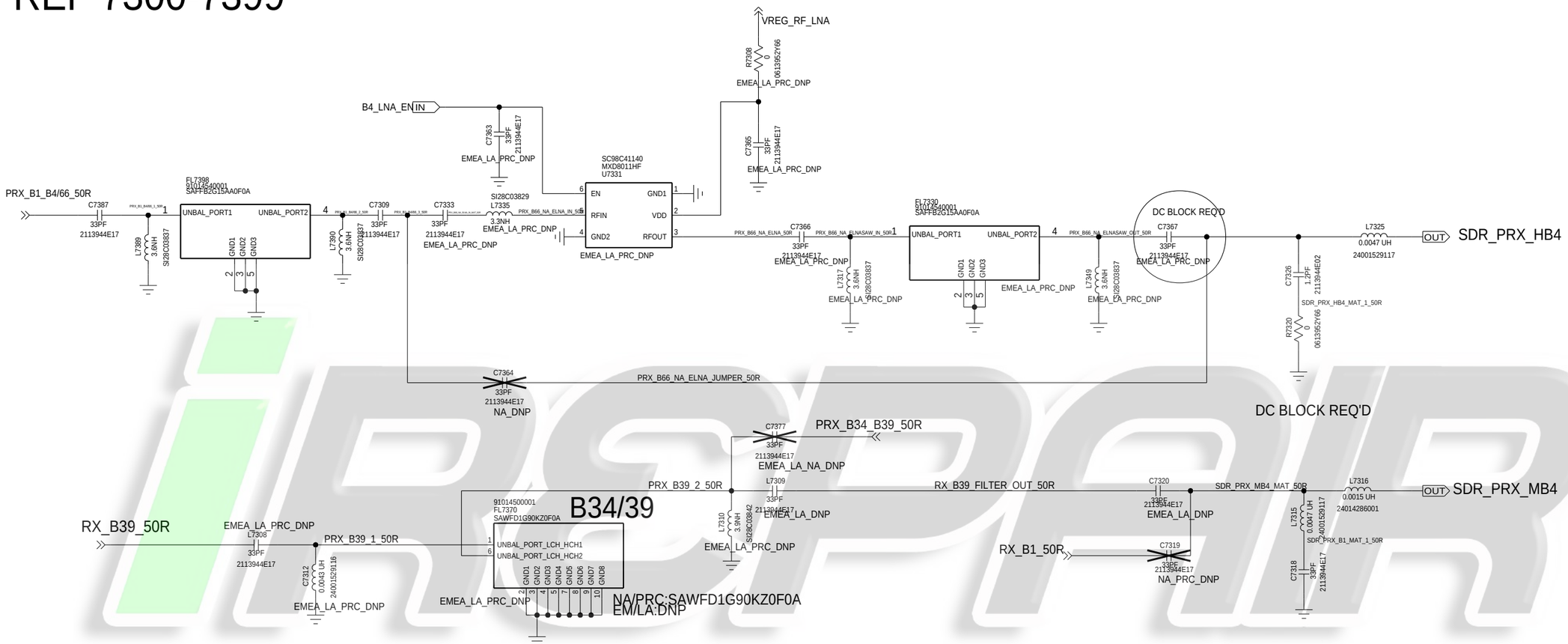

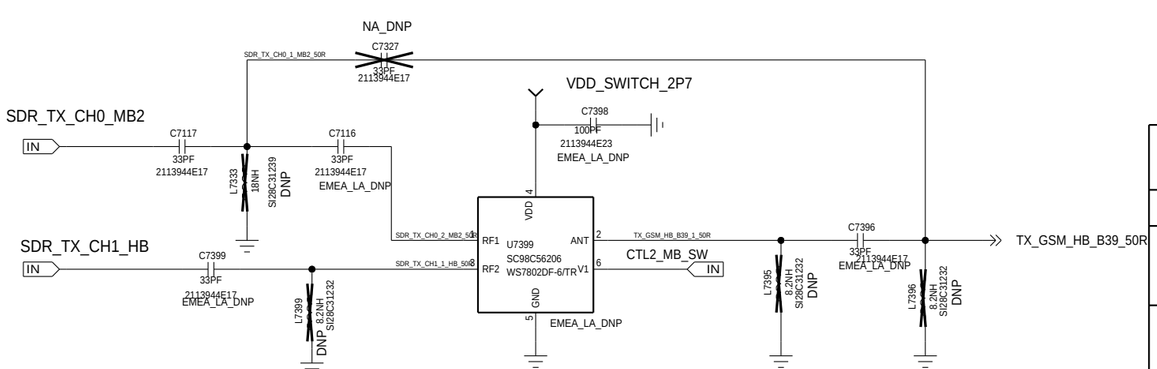

APPROVALS	MOTOROLA MOBILE DEVICES	
ENGINEER:	BLOCK TITLE: rffe	
LAST MODIFIED BY: Thu Aug 01 15:53:27 2019		
MOTOROLA CONFIDENTIAL RESTRICTED	B — PROJECT NAME: sr28c55256_a_191107.cpm	REV: 03
THE DRAWING ON THIS PRINT AND INFORMATION THEREWITH ARE PROPRIETARY TO MOTOROLA AND SHALL NOT BE USED OR DISCUSSED IN WHOLE OR IN PART WITHOUT MOTOROLA'S CONSENT. © COPYRIGHT, MOTOROLA. THIS DOES NOT IMPLY PUBLICATION	CAD FILE NAME:	PAGE 14 OF 63

IRSPAIR

RFFE:LB_TRX_B8/B71
REF 7300-7399

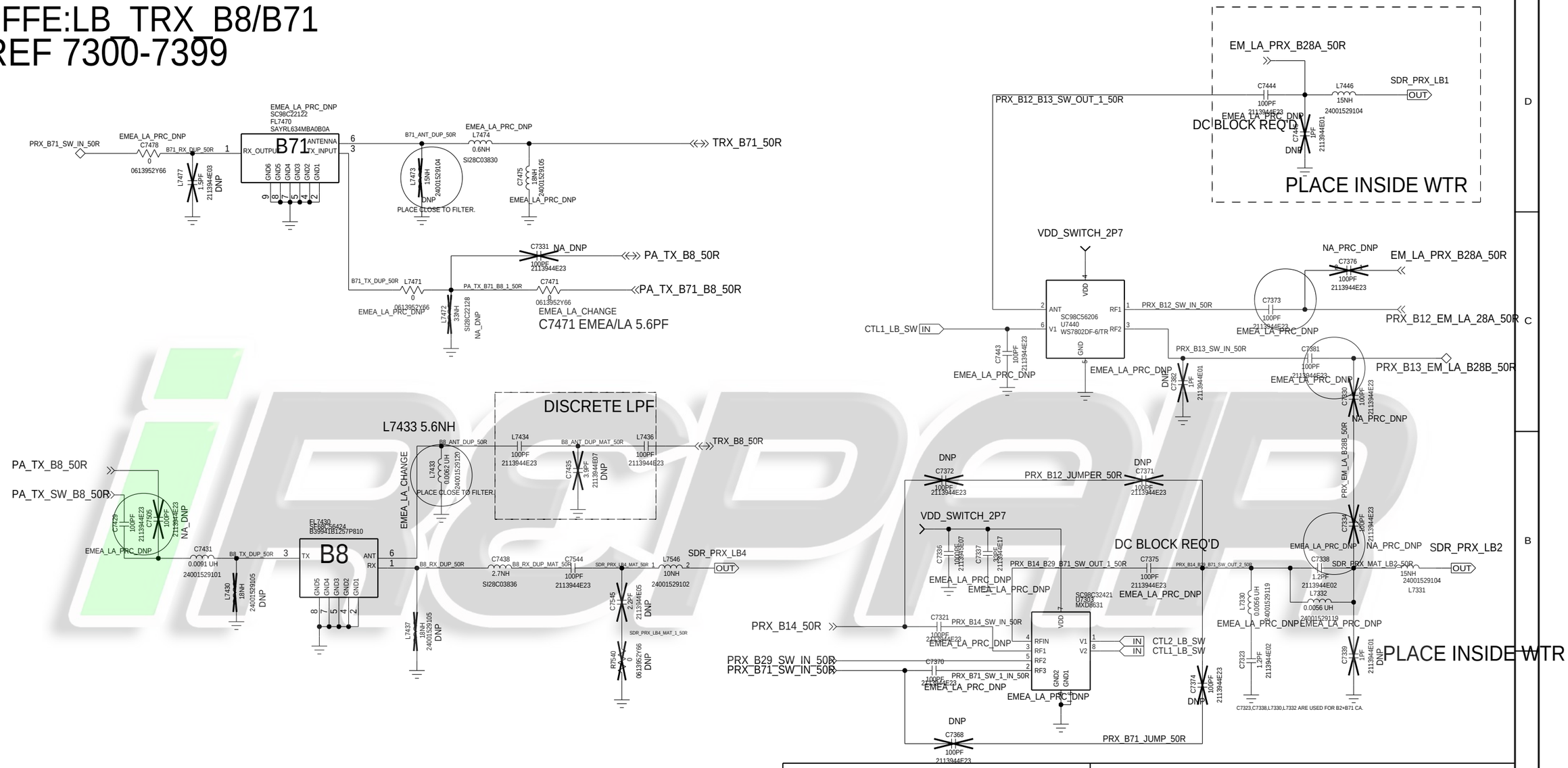

APPROVALS	MOTOROLA MOBILE DEVICES	
ENGINEER:	BLOCK TITLE: rffe	
LAST MODIFIED BY: Thu Aug 01 16:10:47 2019		
MOTOROLA CONFIDENTIAL RESTRICTED	B	PROJECT NAME: sr28c55256_a_191107.cpm — REV: 03
	CAD FILE NAME:	PAGE 15 OF 63

THE DRAWING ON THIS PRINT AND INFORMATION THEREWITH ARE PROPRIETARY TO MOTOROLA AND SHALL NOT BE USED OR DISCUSSED IN WHOLE OR IN PART WITHOUT MOTOROLA'S CONSENT.
© COPYRIGHT, MOTOROLA. THIS DOES NOT IMPLY PUBLICATION

RFFE:LB_TRX_B5/B26_B12
REF 7500-7599

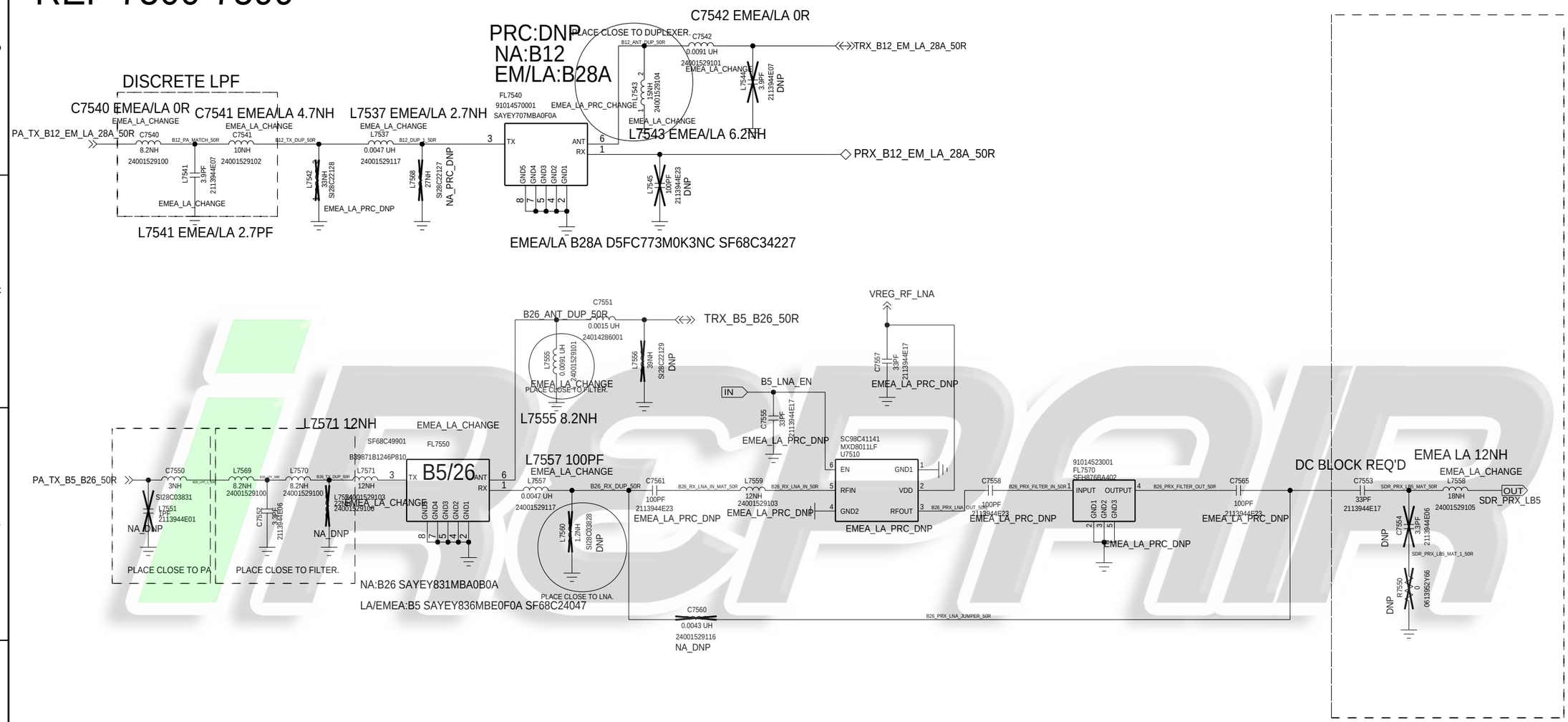

APPROVALS	MOTOROLA MOBILE DEVICES	
ENGINEER:	BLOCK TITLE: rffe	
LAST MODIFIED BY: Thu Nov 07 10:24:38 2019		
MOTOROLA CONFIDENTIAL RESTRICTED	B — PROJECT NAME: sr28c55256_a_191107.cpm	REV 03
THE DRAWING ON THIS PRINT AND INFORMATION THEREWITH ARE PROPRIETARY TO MOTOROLA AND SHALL NOT BE USED OR DISCUSSED IN WHOLE OR IN PART WITHOUT MOTOROLA'S CONSENT.	CAD FILE NAME:	PAGE 16 OF 63

© COPYRIGHT, MOTOROLA. THIS DOES NOT IMPLY PUBLICATION

RFFE:LB_TRX_B13/B14/B20/B29
REF 7500-7599

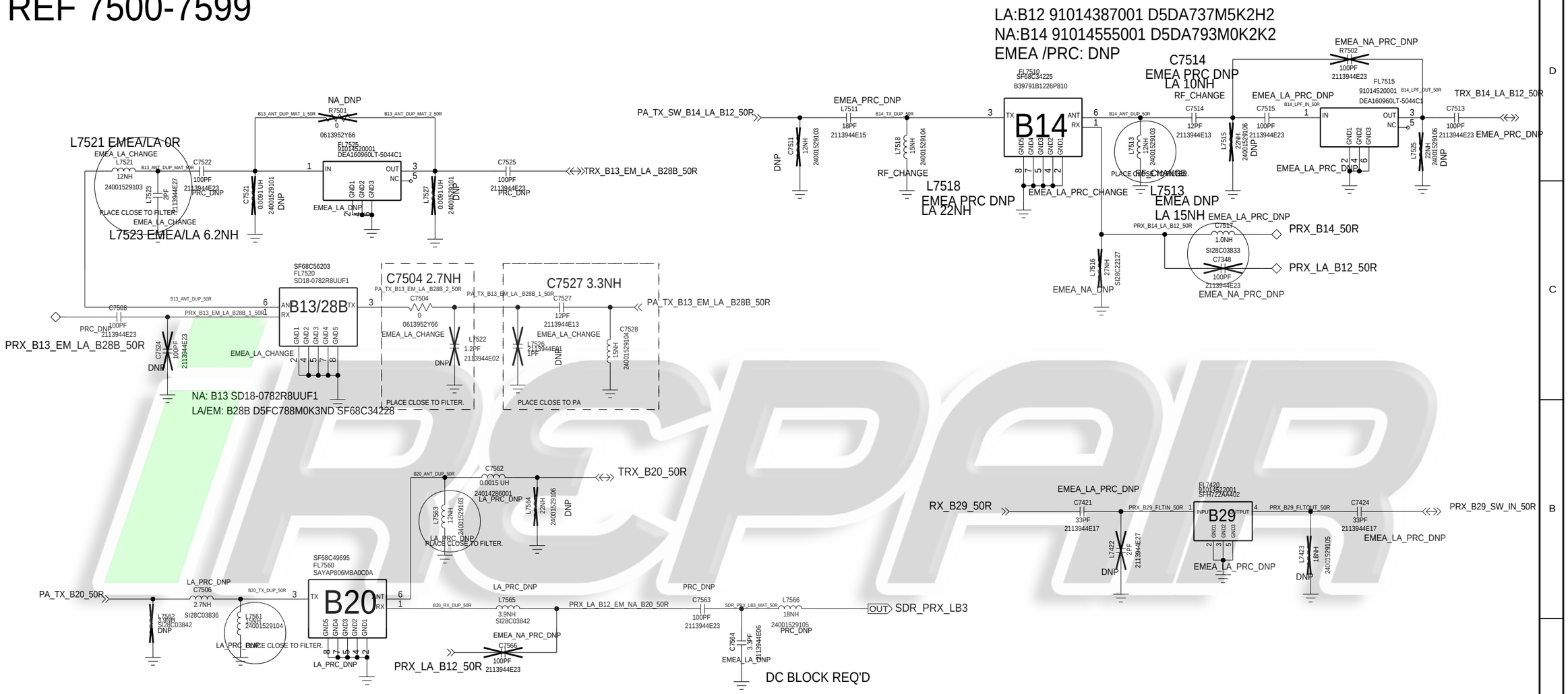

APPROVALS	MOTOROLA MOBILE DEVICES
ENGINEER:	BLOCK TITLE: rffe
LAST MODIFIED BY: Thu Nov 07 10:25:55 2019	
MOTOROLA CONFIDENTIAL RESTRICTED	B — PROJECT NAME: sr28c55256_a_191107.cpm — REV: 03
THE DRAWING ON THIS PRINT AND INFORMATION THEREWITH ARE PROPRIETARY TO MOTOROLA AND SHALL NOT BE USED OR DISCUSSED IN WHOLE OR IN PART WITHOUT MOTOROLA'S CONSENT. © COPYRIGHT, MOTOROLA. THIS DOES NOT IMPLY PUBLICATION	CAD FILE NAME: — PAGE 17 OF 63

IRSPAIR

RFFE:DRX_ASM_HB_B7/B30/B38/B40/B41
REF 7600-7699

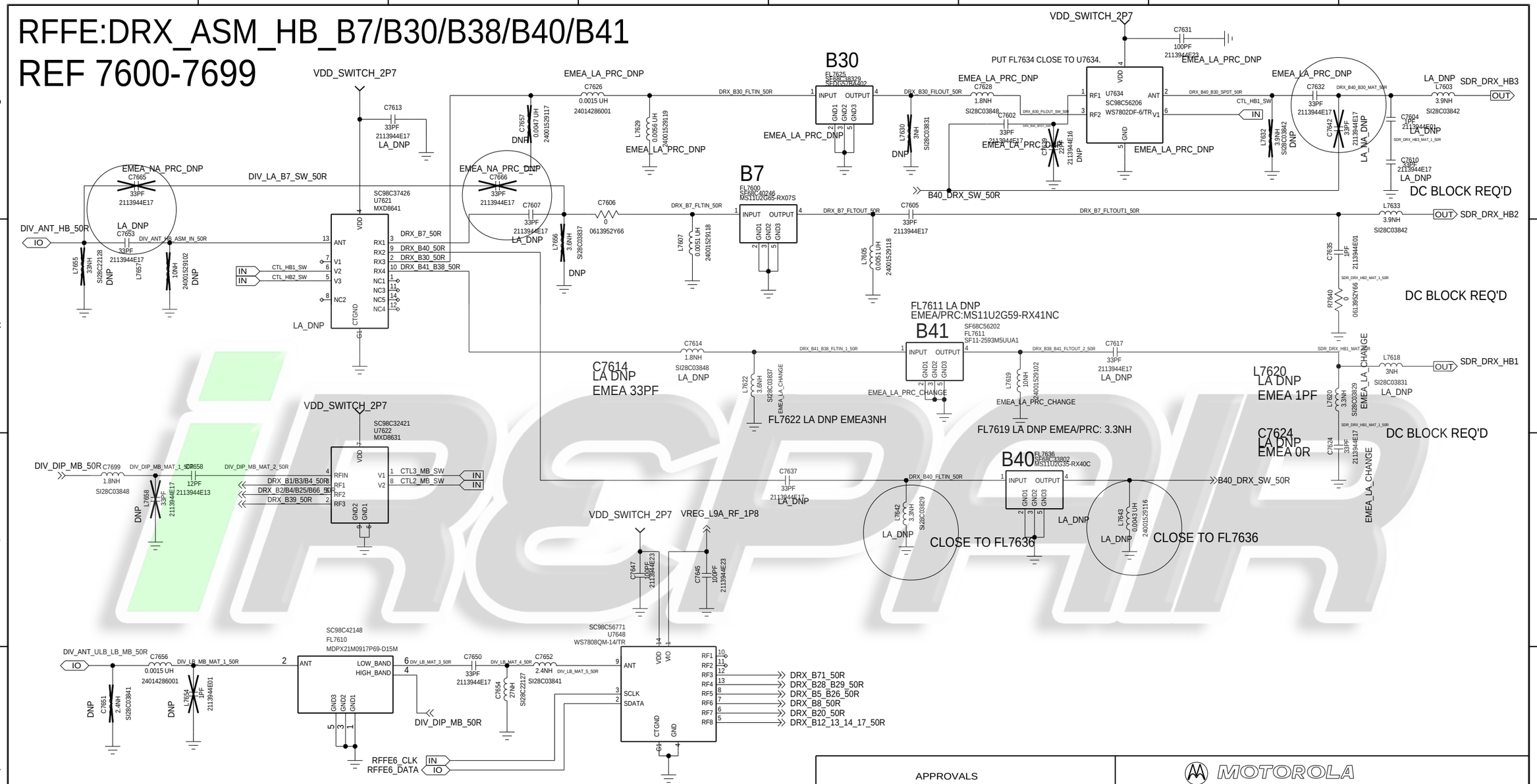

APPROVALS	MOTOROLA MOBILE DEVICES
ENGINEER:	BLOCK TITLE: rffe
LAST MODIFIED BY: Thu Aug 01 15:53:28 2019	
MOTOROLA CONFIDENTIAL RESTRICTED	B — PROJECT NAME: sr28c55256_a_191107.cpm — REV: 03
THE DRAWING ON THIS PRINT AND INFORMATION THEREWITH ARE PROPRIETARY TO MOTOROLA AND SHALL NOT BE USED OR DISCUSSED IN WHOLE OR IN PART WITHOUT MOTOROLA'S CONSENT. © COPYRIGHT, MOTOROLA. THIS DOES NOT IMPLY PUBLICATION	CAD FILE NAME: — PAGE 18 OF 63

RFFE:MB_DRX
REF 7700-7749

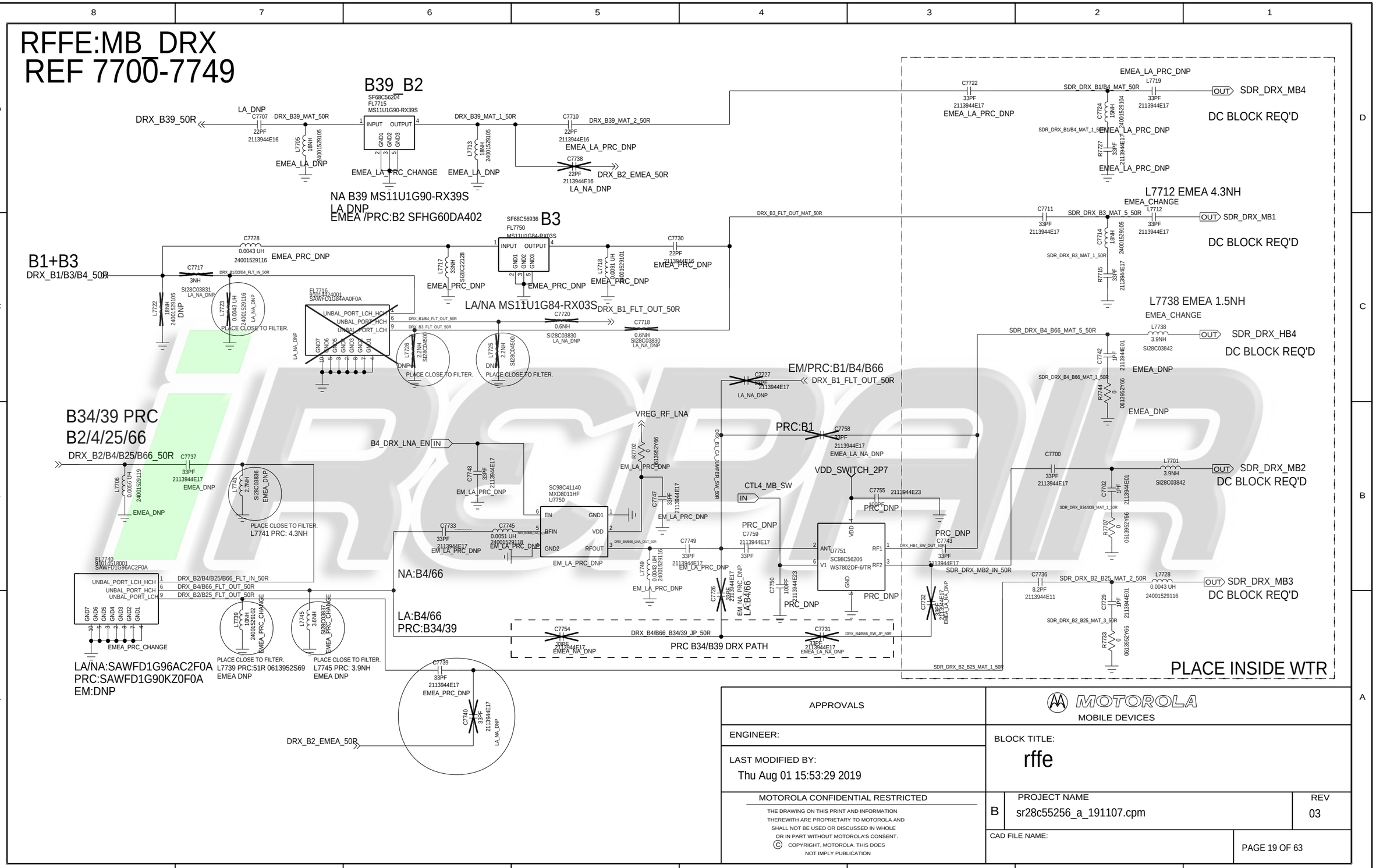

APPROVALS	MOTOROLA MOBILE DEVICES	
ENGINEER:	BLOCK TITLE: rffe	
LAST MODIFIED BY: Thu Aug 01 15:53:29 2019		
MOTOROLA CONFIDENTIAL RESTRICTED	B	PROJECT NAME: sr28c55256_a_191107.cpm — REV: 03
THE DRAWING ON THIS PRINT AND INFORMATION THEREWITH ARE PROPRIETARY TO MOTOROLA AND SHALL NOT BE USED OR DISCUSSED IN WHOLE OR IN PART WITHOUT MOTOROLA'S CONSENT. © COPYRIGHT, MOTOROLA. THIS DOES NOT IMPLY PUBLICATION	CAD FILE NAME:	PAGE 19 OF 63

RFFE:LB_DRX
REF 7750-7799

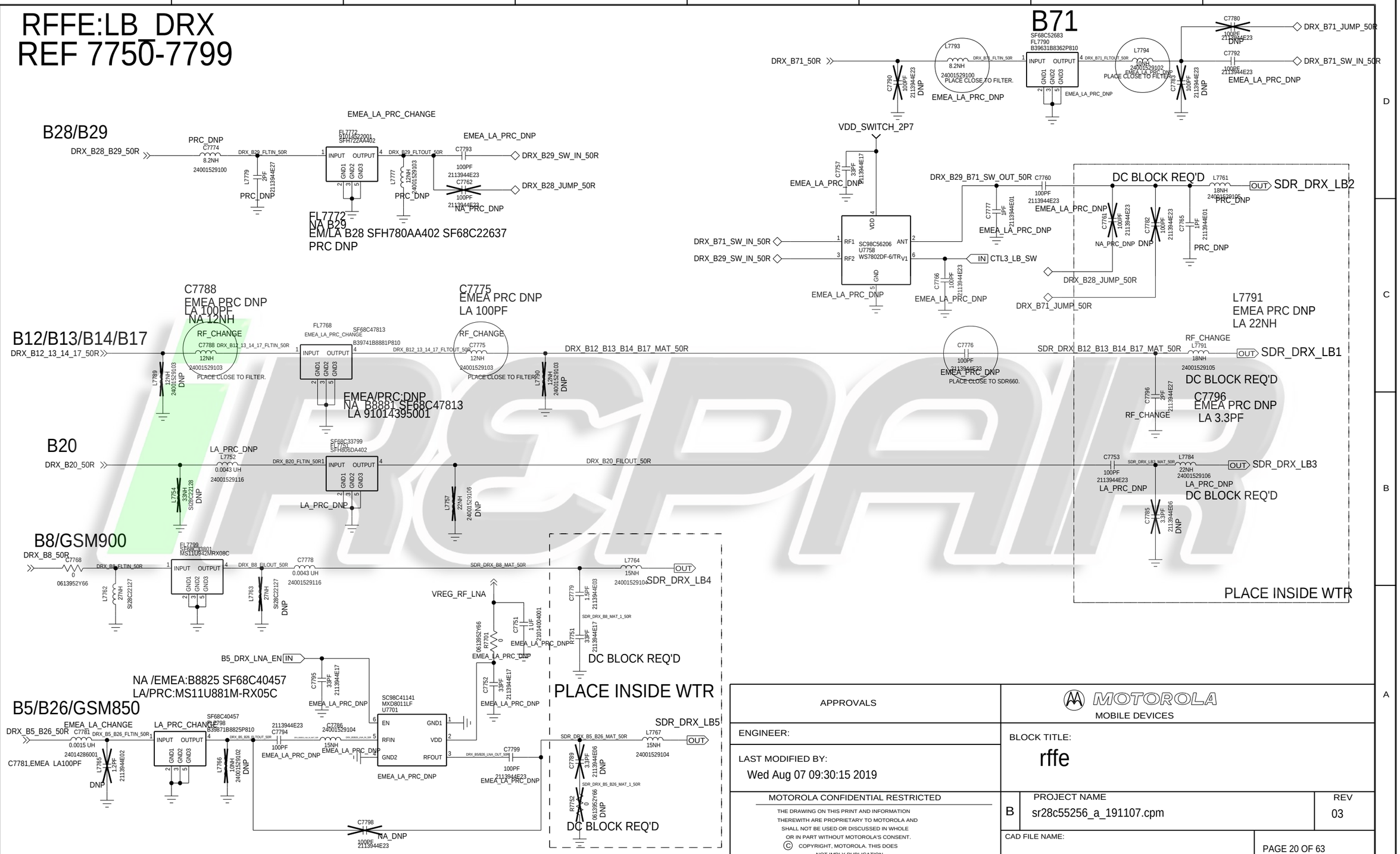

APPROVALS	MOTOROLA MOBILE DEVICES	
ENGINEER:	BLOCK TITLE: rffe	
LAST MODIFIED BY: Wed Aug 07 09:30:15 2019		
MOTOROLA CONFIDENTIAL RESTRICTED THE DRAWING ON THIS PRINT AND INFORMATION THEREWITH ARE PROPRIETARY TO MOTOROLA AND SHALL NOT BE USED OR DISCUSSED IN WHOLE OR IN PART WITHOUT MOTOROLA'S CONSENT. © COPYRIGHT, MOTOROLA. THIS DOES NOT IMPLY PUBLICATION	B — PROJECT NAME: sr28c55256_a_191107.cpm	REV: 03
	CAD FILE NAME:	PAGE 20 OF 63

mobdata.org

RFFE:QET4101
REF7900-7949

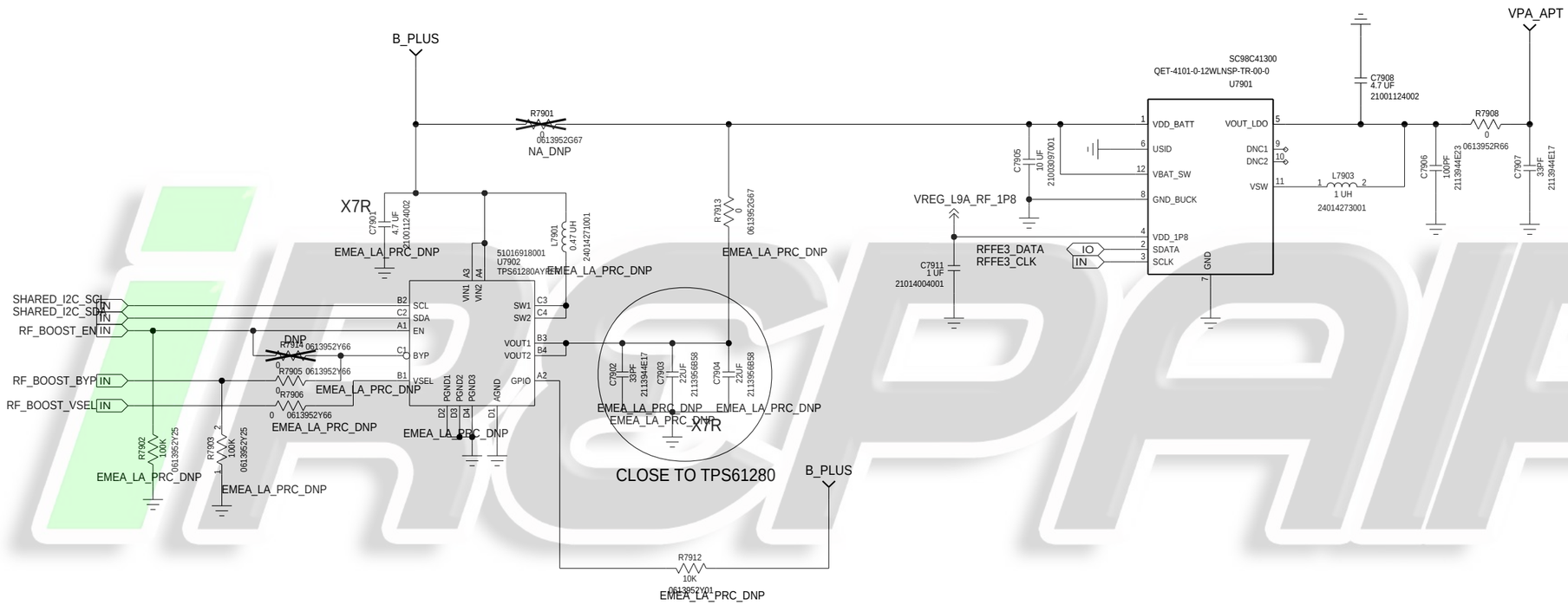

APPROVALS	MOTOROLA MOBILE DEVICES	
ENGINEER:	BLOCK TITLE: rffe	
LAST MODIFIED BY: Thu Aug 01 15:53:30 2019		
MOTOROLA CONFIDENTIAL RESTRICTED	B — PROJECT NAME: sr28c55256_a_191107.cpm	REV 03
THE DRAWING ON THIS PRINT AND INFORMATION THEREWITH ARE PROPRIETARY TO MOTOROLA AND SHALL NOT BE USED OR DISCUSSED IN WHOLE OR IN PART WITHOUT MOTOROLA'S CONSENT.	CAD FILE NAME:	PAGE 21 OF 63

© COPYRIGHT, MOTOROLA. THIS DOES NOT IMPLY PUBLICATION

XMCS:AUDIO CODEC

REF: 6500-6699

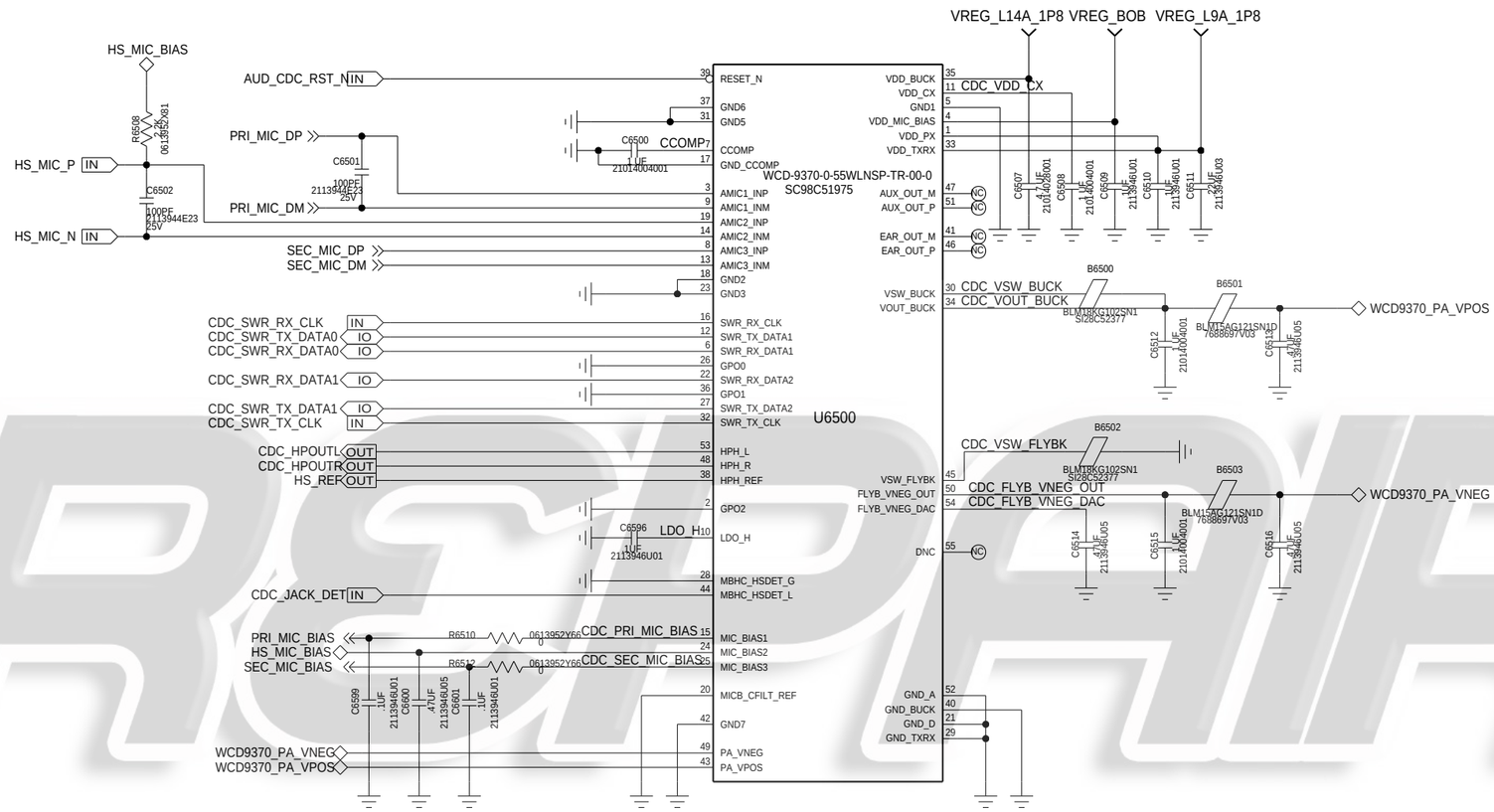

FOR MAIN CONNECTOR

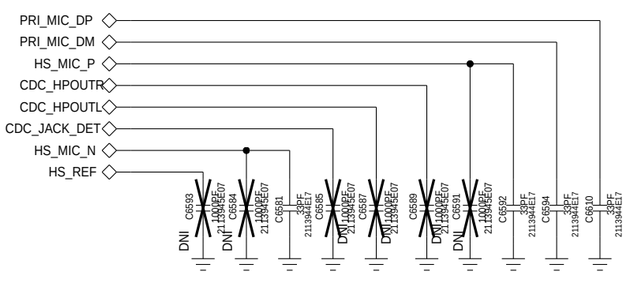

APPROVALS	MOTOROLA MOBILE DEVICES
ENGINEER: MOTOROLA	BLOCK TITLE: audio
LAST MODIFIED BY: MOTOROLA Tue Sep 24 12:25:58 2019	
MOTOROLA CONFIDENTIAL RESTRICTED	PROJECT NAME: sr28c55256_a_191107.cpm — REV: 03
	CAD FILE NAME:

THE DRAWING ON THIS PRINT AND INFORMATION THEREWITH ARE PROPRIETARY TO MOTOROLA AND SHALL NOT BE USED OR DISCUSSED IN WHOLE OR IN PART WITHOUT MOTOROLA'S CONSENT.
© COPYRIGHT, MOTOROLA. THIS DOES NOT IMPLY PUBLICATION

XMCS:AUDIO DSP

REF: 6500-6699

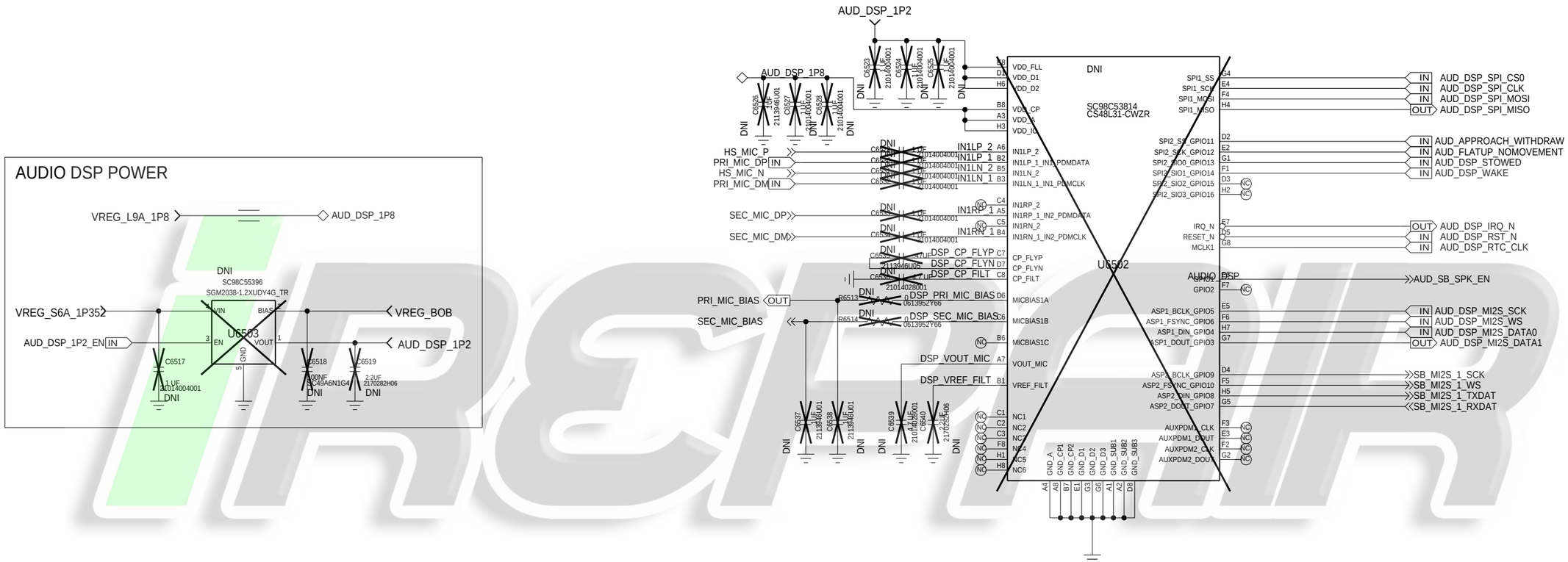

APPROVALS	MOTOROLA MOBILE DEVICES
ENGINEER: MOTOROLA	BLOCK TITLE: audio
LAST MODIFIED BY: MOTOROLA Tue Sep 24 12:25:53 2019	
MOTOROLA CONFIDENTIAL RESTRICTED	B — PROJECT NAME: sr28c55256_a_191107.cpm — REV: 03
THE DRAWING ON THIS PRINT AND INFORMATION THEREWITH ARE PROPRIETARY TO MOTOROLA AND SHALL NOT BE USED OR DISCUSSED IN WHOLE OR IN PART WITHOUT MOTOROLA'S CONSENT.	CAD FILE NAME:
© COPYRIGHT, MOTOROLA. THIS DOES NOT IMPLY PUBLICATION	PAGE 23 OF 63

XMCS:SMART BOOST

REF: 6500-6699

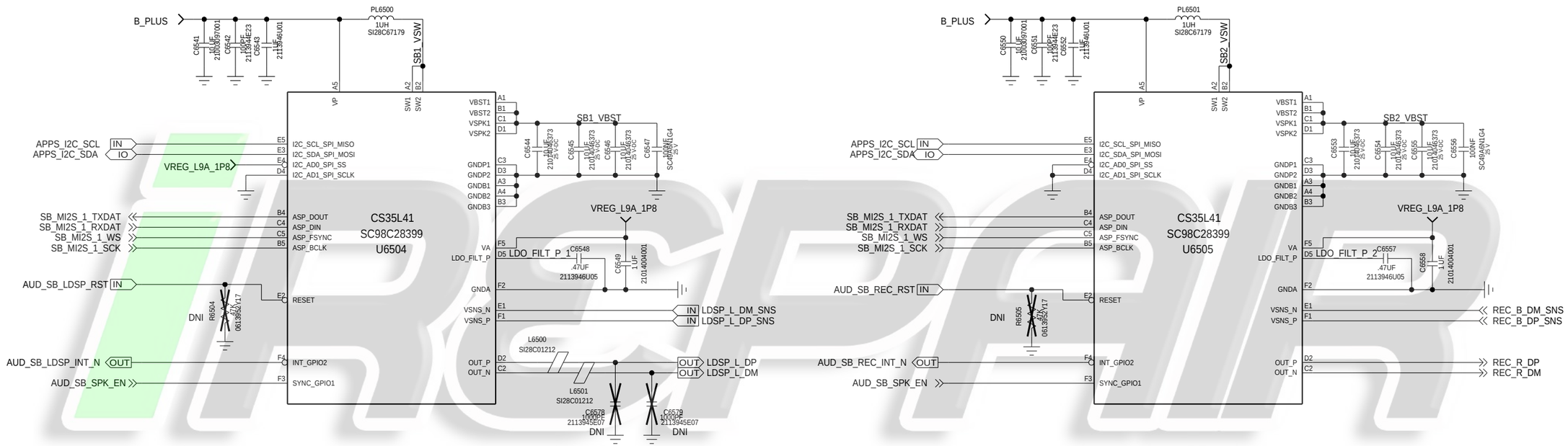

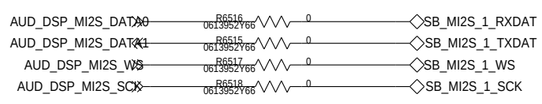

APPROVALS	MOTOROLA MOBILE DEVICES
ENGINEER: MOTOROLA	BLOCK TITLE: audio
LAST MODIFIED BY: MOTOROLA Wed Oct 16 11:57:33 2019	
MOTOROLA CONFIDENTIAL RESTRICTED	B — PROJECT NAME: sr28c55256_a_191107.cpm — REV: 03
THE DRAWING ON THIS PRINT AND INFORMATION THEREWITH ARE PROPRIETARY TO MOTOROLA AND SHALL NOT BE USED OR DISCUSSED IN WHOLE OR IN PART WITHOUT MOTOROLA'S CONSENT.	CAD FILE NAME:
© COPYRIGHT, MOTOROLA. THIS DOES NOT IMPLY PUBLICATION	PAGE 24 OF 63

XMCS:LINEAR VIBRATOR

REF: 6500-6699

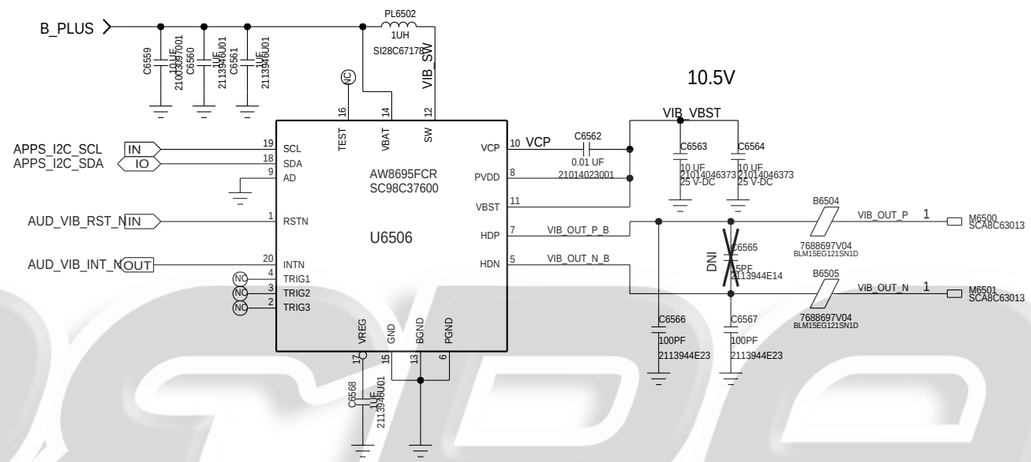

APPROVALS	MOTOROLA MOBILE DEVICES
ENGINEER: MOTOROLA	BLOCK TITLE: audio
LAST MODIFIED BY: MOTOROLA Fri Sep 06 11:03:56 2019	
MOTOROLA CONFIDENTIAL RESTRICTED	B — PROJECT NAME: sr28c55256_a_191107.cpm — REV: 03
THE DRAWING ON THIS PRINT AND INFORMATION THEREWITH ARE PROPRIETARY TO MOTOROLA AND SHALL NOT BE USED OR DISCUSSED IN WHOLE OR IN PART WITHOUT MOTOROLA'S CONSENT. © COPYRIGHT, MOTOROLA. THIS DOES NOT IMPLY PUBLICATION	CAD FILE NAME:

iREPAIR

AFE:RECIEVER/MIC

REF: 6500-6699

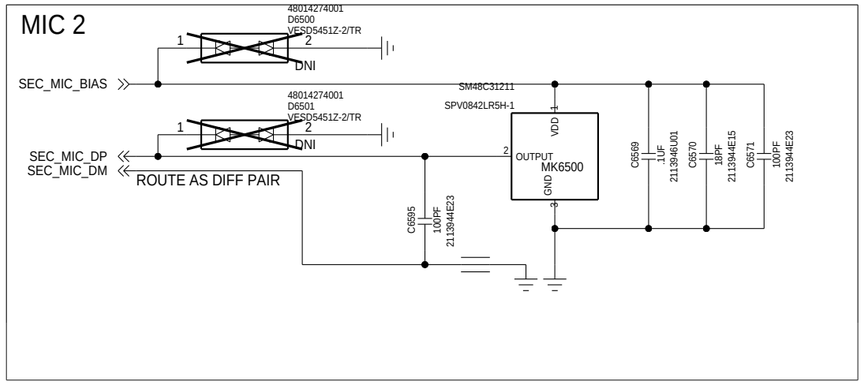

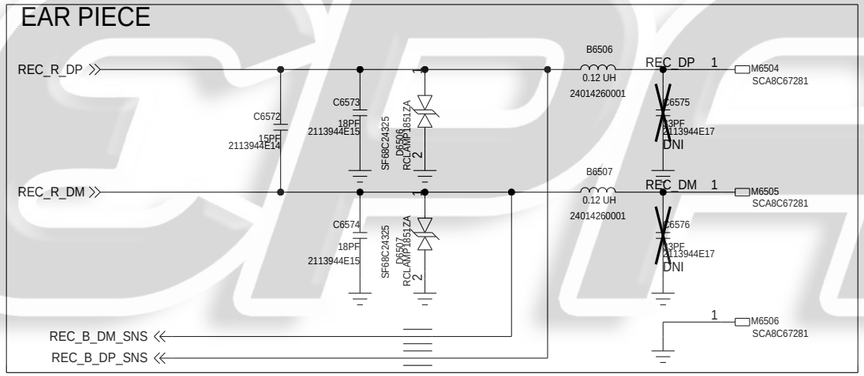

APPROVALS	MOTOROLA MOBILE DEVICES
ENGINEER: MOTOROLA	BLOCK TITLE: audio
LAST MODIFIED BY: MOTOROLA Mon Sep 16 13:47:41 2019	
MOTOROLA CONFIDENTIAL RESTRICTED	B — PROJECT NAME: sr28c55256_a_191107.cpm — REV: 03
THE DRAWING ON THIS PRINT AND INFORMATION THEREWITH ARE PROPRIETARY TO MOTOROLA AND SHALL NOT BE USED OR DISCUSSED IN WHOLE OR IN PART WITHOUT MOTOROLA'S CONSENT. © COPYRIGHT, MOTOROLA. THIS DOES NOT IMPLY PUBLICATION	CAD FILE NAME: — PAGE 26 OF 63

iREPAIR

PWR:BATTERY CONNECTOR

REF: 5400-5999

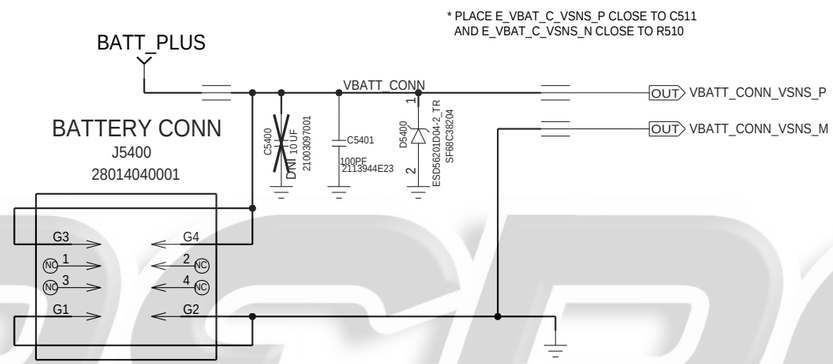

FACTORY TEST POINT

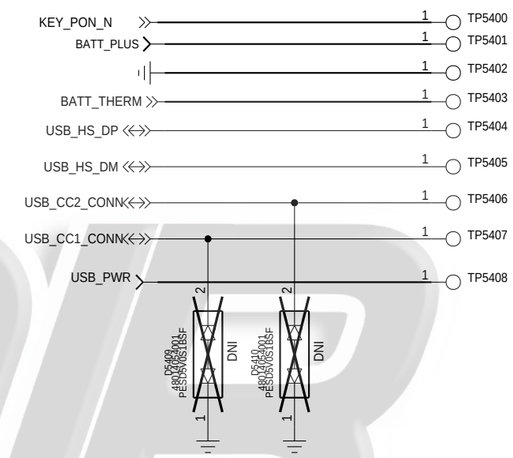

MOTOROLA MOBILITY CONFIDENTIAL RESTRICTED-MDB TRACKED TRACKEDANDBLOCKED

APPROVALS	MOTOROLA MOBILE DEVICES
ENGINEER: MOTOROLA	BLOCK TITLE: power
LAST MODIFIED BY: MOTOROLA Fri Sep 20 10:39:57 2019	
MOTOROLA CONFIDENTIAL RESTRICTED	B PROJECT NAME sr28c55256_a_191107.cpm REV 03
THE DRAWING ON THIS PRINT AND INFORMATION THEREWITH ARE PROPRIETARY TO MOTOROLA AND SHALL NOT BE USED OR DISCUSSED IN WHOLE OR IN PART WITHOUT MOTOROLA'S CONSENT. © COPYRIGHT, MOTOROLA. THIS DOES NOT IMPLY PUBLICATION	CAD FILE NAME: PAGE 27 OF 63

iREPAIR

PWR:SIDEKEY CONNECTOR

REF: 5400-5999

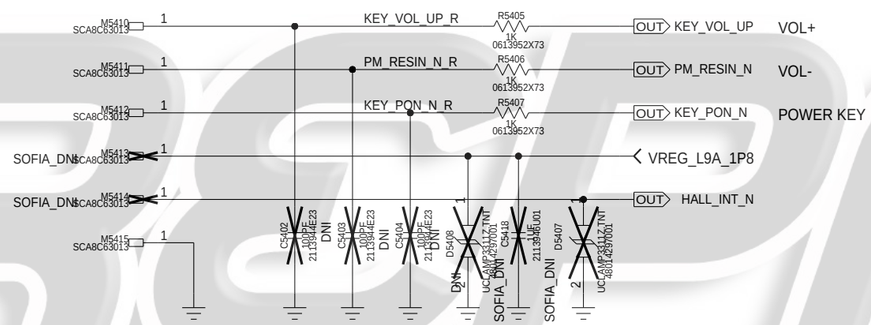

APPROVALS	MOTOROLA MOBILE DEVICES
ENGINEER: MOTOROLA	BLOCK TITLE: power
LAST MODIFIED BY: MOTOROLA Mon Aug 19 14:44:50 2019	
MOTOROLA CONFIDENTIAL RESTRICTED	PROJECT NAME: sr28c55256_a_191107.cpm — REV: 03
	CAD FILE NAME:
	PAGE 28 OF 63

THE DRAWING ON THIS PRINT AND INFORMATION THEREWITH ARE PROPRIETARY TO MOTOROLA AND SHALL NOT BE USED OR DISCUSSED IN WHOLE OR IN PART WITHOUT MOTOROLA'S CONSENT.
© COPYRIGHT, MOTOROLA. THIS DOES NOT IMPLY PUBLICATION

PWR:MAIN CONNECTOR

REF: 5400-5999

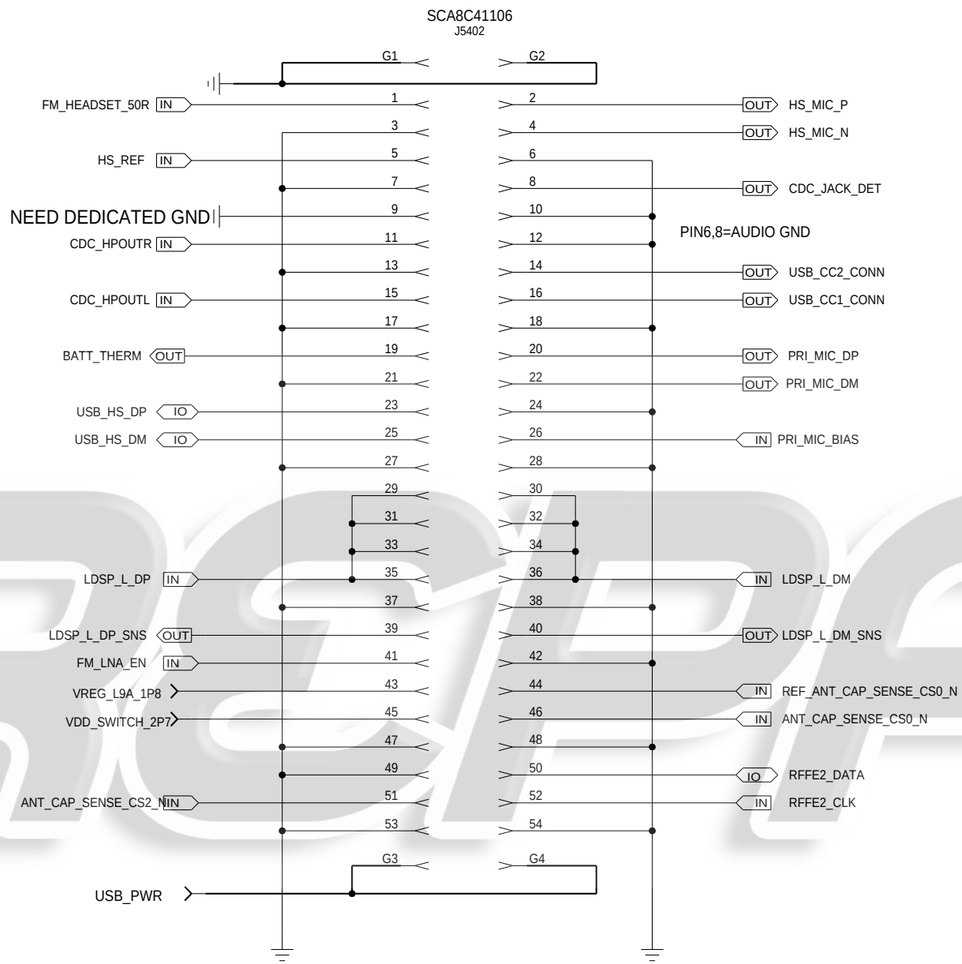

MOTOROLA MOBILITY CONFIDENTIAL RESTRICTED-MDB TRACKED TRACKEDANDBLOCKED

APPROVALS	MOTOROLA MOBILE DEVICES
ENGINEER: MOTOROLA	BLOCK TITLE: power
LAST MODIFIED BY: MOTOROLA Wed Sep 11 13:47:40 2019	
MOTOROLA CONFIDENTIAL RESTRICTED	B — PROJECT NAME: sr28c55256_a_191107.cpm — REV: 03
	CAD FILE NAME: — PAGE 29 OF 63

THE DRAWING ON THIS PRINT AND INFORMATION THEREWITH ARE PROPRIETARY TO MOTOROLA AND SHALL NOT BE USED OR DISCUSSED IN WHOLE OR IN PART WITHOUT MOTOROLA'S CONSENT.
© COPYRIGHT, MOTOROLA. THIS DOES NOT IMPLY PUBLICATION

PWR:UIM1/UIM2/SDCARD CONNECTOR

REF: 5400-5999

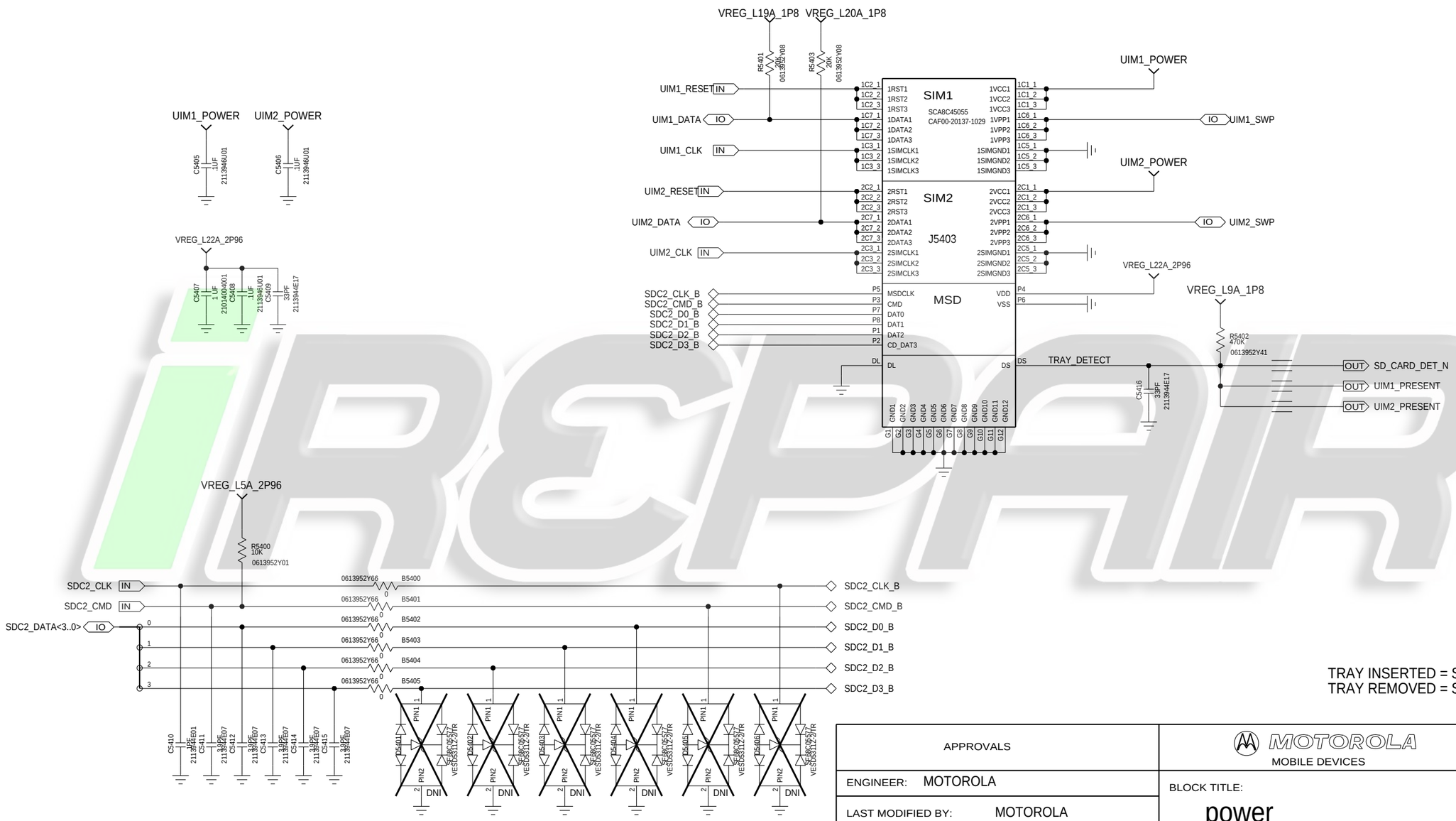

TRAY INSERTED = SWITCH CLOSED = LOGIC L
TRAY REMOVED = SWITCH OPEN = LOGIC H

NOTE 1: USE 24.9K PULL-UP TO SUPPORT HOT SWAP WITH FREEZE-IO FEATURE.

NOTE 2: UIM_PWR BYPASS OF 0.33UF RECOMMENDED BY NFC IC SUPPLIER, PLACE NEAR CONNECTOR.

APPROVALS	MOTOROLA MOBILE DEVICES
ENGINEER: MOTOROLA	BLOCK TITLE: power
LAST MODIFIED BY: MOTOROLA Thu Aug 01 15:53:21 2019	
MOTOROLA CONFIDENTIAL RESTRICTED	B — PROJECT NAME: sr28c55256_a_191107.cpm — REV: 03
	CAD FILE NAME: — PAGE 30 OF 63

THE DRAWING ON THIS PRINT AND INFORMATION THEREWITH ARE PROPRIETARY TO MOTOROLA AND SHALL NOT BE USED OR DISCUSSED IN WHOLE OR IN PART WITHOUT MOTOROLA'S CONSENT.
© COPYRIGHT, MOTOROLA. THIS DOES NOT IMPLY PUBLICATION

MOTOROLA MOBILITY CONFIDENTIAL RESTRICTED-MDB TRACKED TRACKEDANDBLOCKED

DISPLAY CONNECTOR

REF: 5300-5399

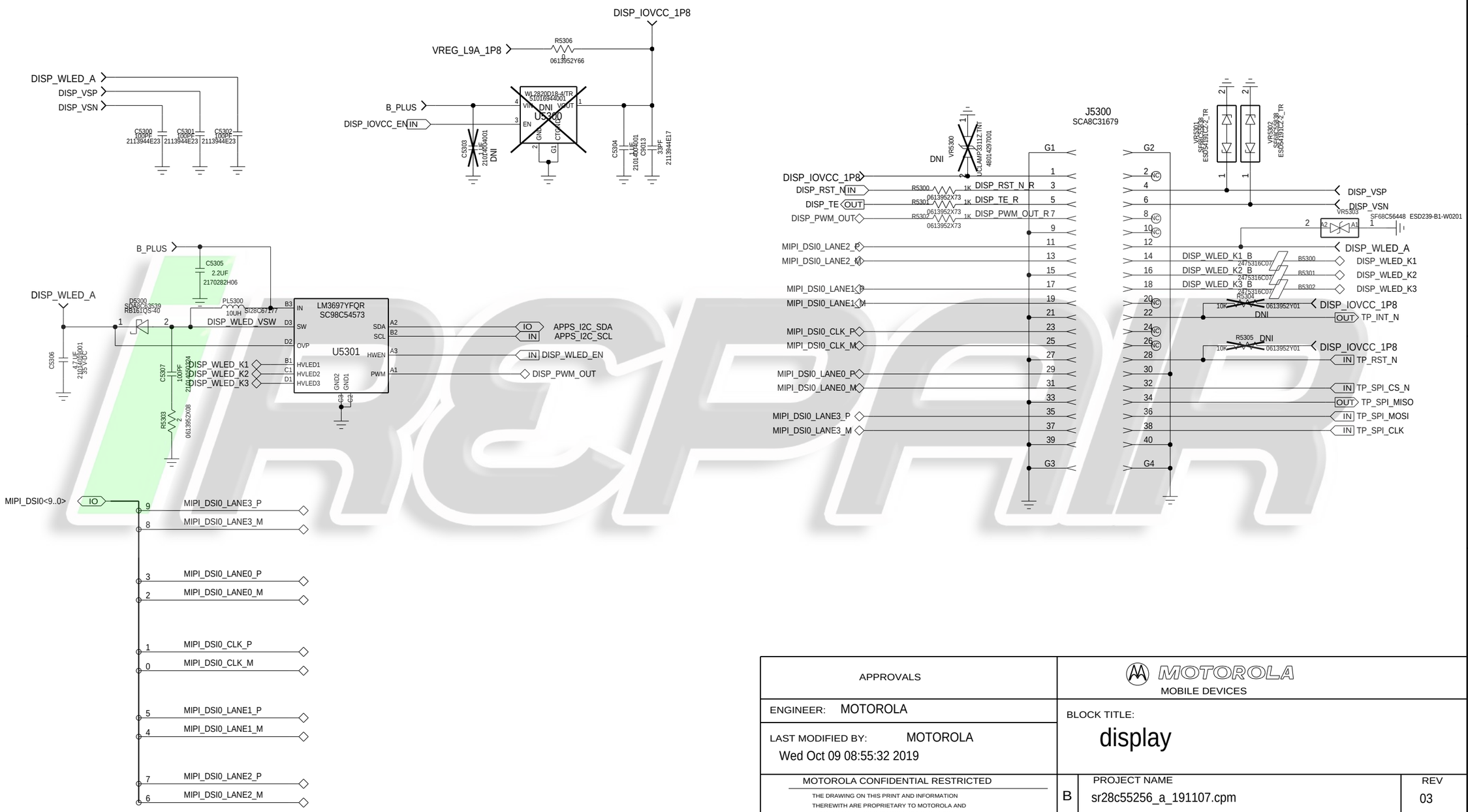

APPROVALS	MOTOROLA MOBILE DEVICES
ENGINEER: MOTOROLA	BLOCK TITLE: display
LAST MODIFIED BY: MOTOROLA Wed Oct 09 08:55:32 2019	
MOTOROLA CONFIDENTIAL RESTRICTED	B — PROJECT NAME: sr28c55256_a_191107.cpm — REV: 03
THE DRAWING ON THIS PRINT AND INFORMATION THEREWITH ARE PROPRIETARY TO MOTOROLA AND SHALL NOT BE USED OR DISCUSSED IN WHOLE OR IN PART WITHOUT MOTOROLA'S CONSENT. © COPYRIGHT, MOTOROLA. THIS DOES NOT IMPLY PUBLICATION	CAD FILE NAME:

CAM:POWER

REF:5000-5299

REAR MAIN & DEPTH CAMERA AFVDD LDO 2.8V

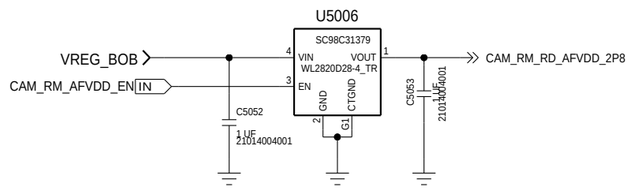

REAR MAIN & FRONT CAMERA AVDD LDO 2.8V

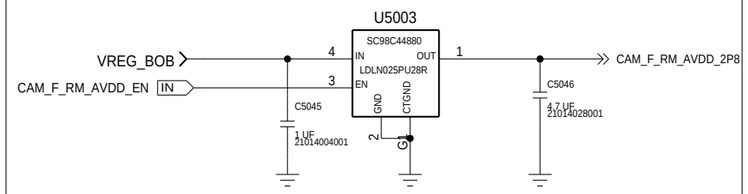

REAR MAIN & FRONT CAMERA DVDD LDO 1.05V

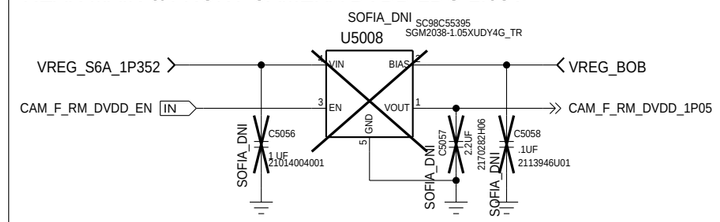

REAR MAIN CAMERA DVDD LDO 1.2V

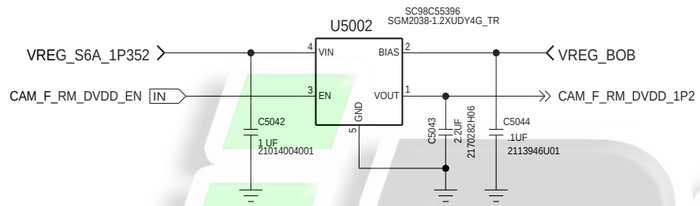

SOFIA

REAR VEDIO & DEPTH CAMERA AVDD LDO 2.8V

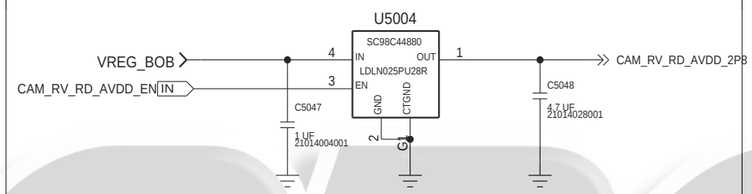

REAR VIDEO & DEPTH CAMERA DVDD LDO 1.2V

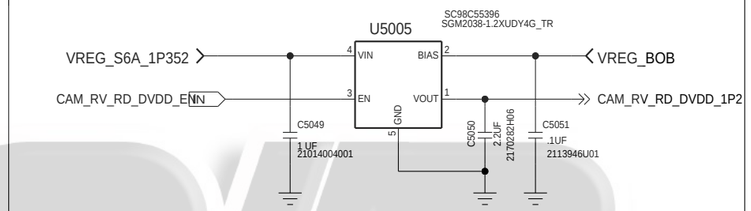

REAR DEPTH CAMERA IOVDD LDO 1.8V

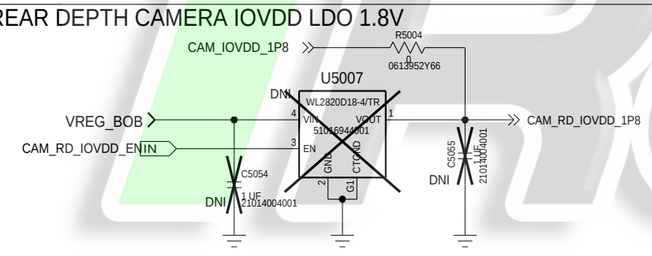

IMAGER IOVDD LDO 1.8V

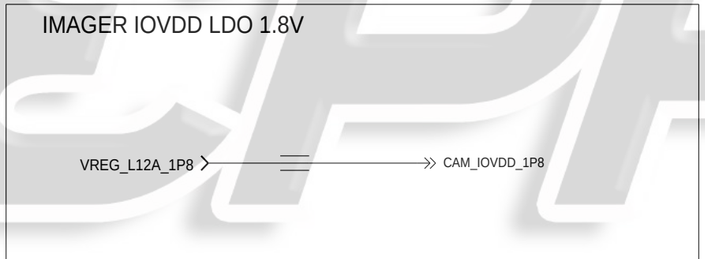

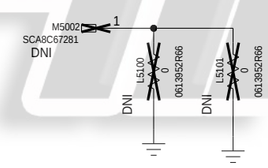

SOFIA+, CAM_IOVDD_1P8 ---> CAM_RD_IOVDD_1P8
SOFIA, VREG_S7A_2P04 ---> U5007 ---> CAM_RD_IOVDD_1P8

APPROVALS	MOTOROLA MOBILE DEVICES	
ENGINEER: MOTOROLA	BLOCK TITLE: imagers	
LAST MODIFIED BY: MOTOROLA Mon Sep 23 16:17:29 2019		
MOTOROLA CONFIDENTIAL RESTRICTED	B	PROJECT NAME sr28c55256_a_191107.cpm	REV 03
	CAD FILE NAME:	PAGE 32 OF 63

THE DRAWING ON THIS PRINT AND INFORMATION THEREWITH ARE PROPRIETARY TO MOTOROLA AND SHALL NOT BE USED OR DISCUSSED IN WHOLE OR IN PART WITHOUT MOTOROLA'S CONSENT.
© COPYRIGHT, MOTOROLA. THIS DOES NOT IMPLY PUBLICATION

CAM:MIPI MUX

REF:5000-5299

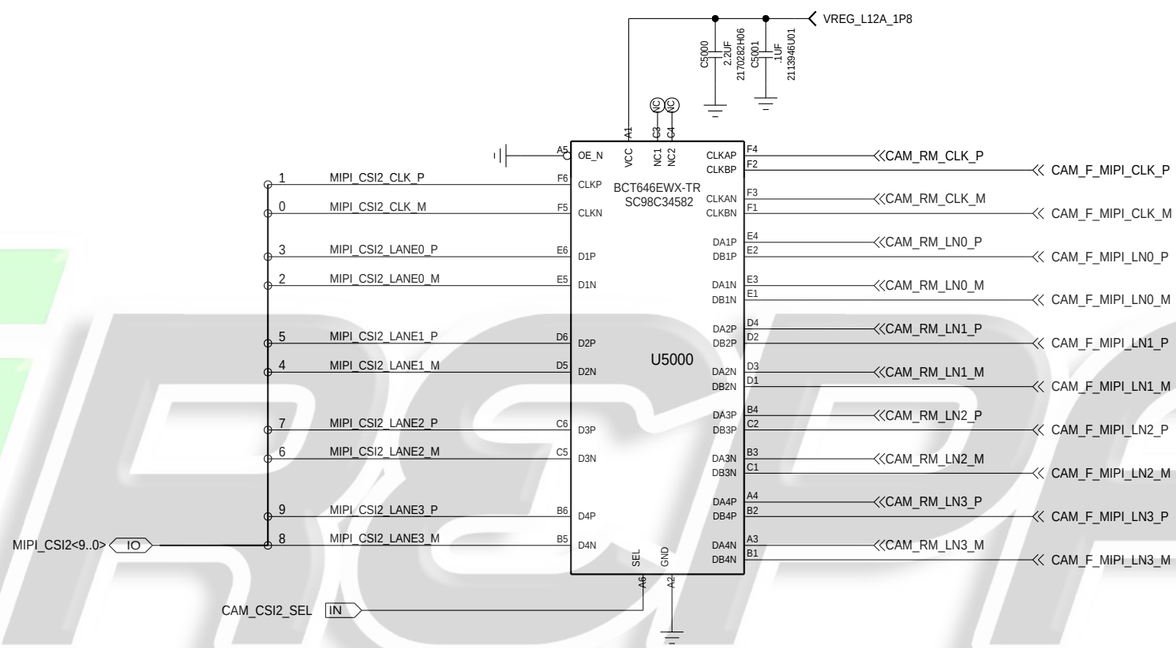

APPROVALS	MOTOROLA MOBILE DEVICES
ENGINEER: MOTOROLA	BLOCK TITLE: imagers
LAST MODIFIED BY: MOTOROLA Thu Aug 01 15:53:43 2019	
MOTOROLA CONFIDENTIAL RESTRICTED	B — PROJECT NAME: sr28c55256_a_191107.cpm — REV: 03
	CAD FILE NAME: — PAGE 33 OF 63

THE DRAWING ON THIS PRINT AND INFORMATION THEREWITH ARE PROPRIETARY TO MOTOROLA AND SHALL NOT BE USED OR DISCUSSED IN WHOLE OR IN PART WITHOUT MOTOROLA'S CONSENT.
© COPYRIGHT, MOTOROLA. THIS DOES NOT IMPLY PUBLICATION

CAM:FLASH LED&TOF

REF:5000-5299

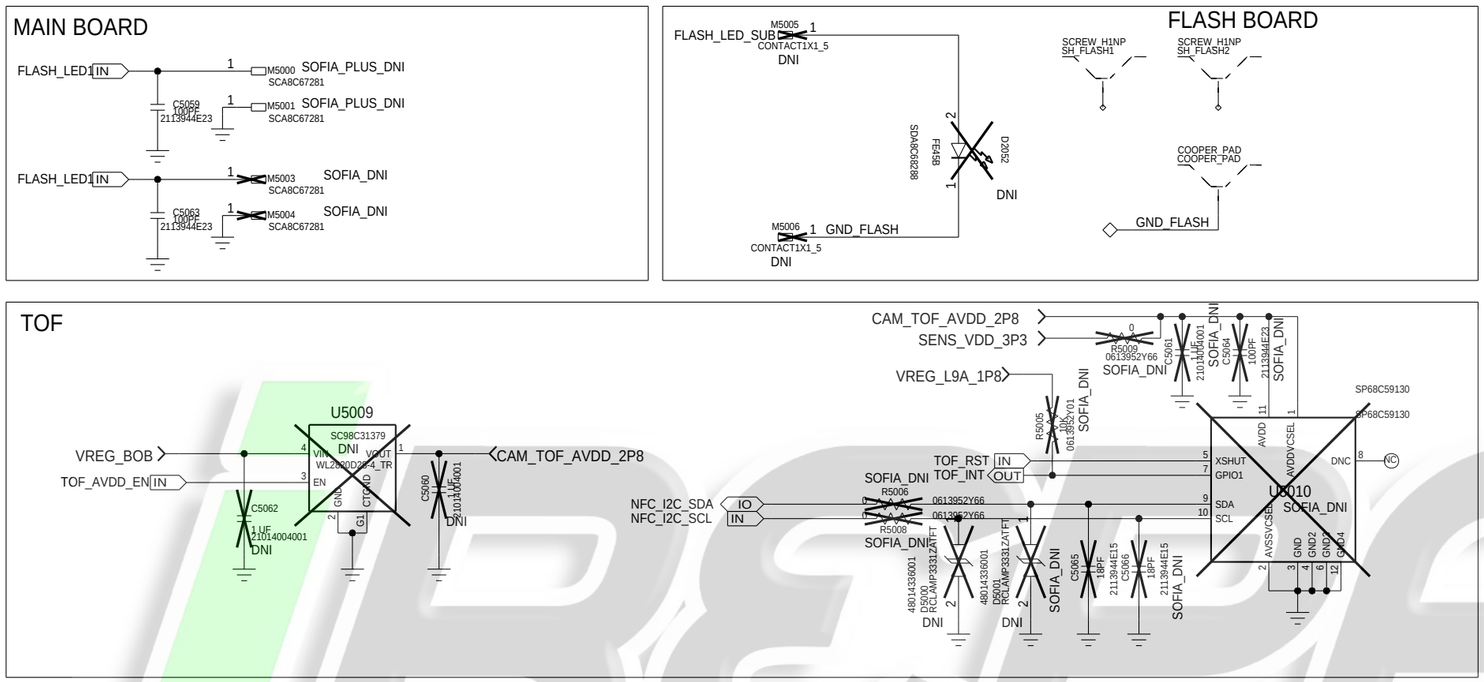

APPROVALS	MOTOROLA MOBILE DEVICES
ENGINEER: MOTOROLA	BLOCK TITLE: imagers
LAST MODIFIED BY: MOTOROLA Mon Sep 23 16:17:31 2019	
MOTOROLA CONFIDENTIAL RESTRICTED	B — PROJECT NAME: sr28c55256_a_191107.cpm — REV: 03
THE DRAWING ON THIS PRINT AND INFORMATION THEREWITH ARE PROPRIETARY TO MOTOROLA AND SHALL NOT BE USED OR DISCUSSED IN WHOLE OR IN PART WITHOUT MOTOROLA'S CONSENT.	CAD FILE NAME:
© COPYRIGHT, MOTOROLA. THIS DOES NOT IMPLY PUBLICATION	PAGE 34 OF 63

iRepair

CAM:FRONT CAMERA

REF:5000-5299

CONTROL

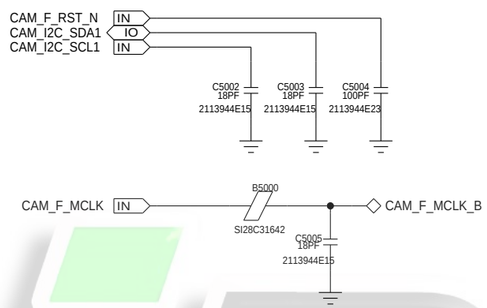

POWER

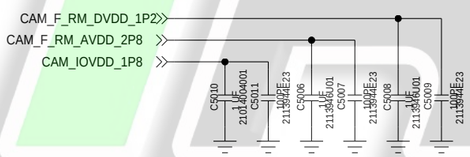

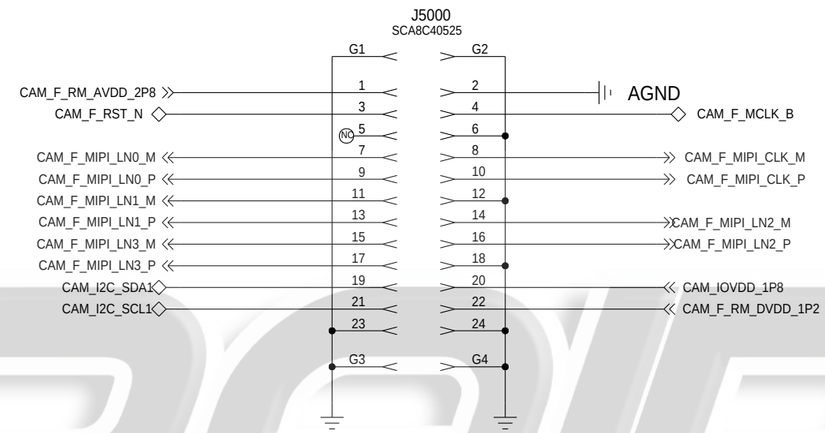

SOFIA&SOFIA+,16MP(OV16A1Q)
SENSOR:0X20(W)/0X21
EEPROM:0XA2(W)/0XA3

iRepair

APPROVALS	MOTOROLA MOBILE DEVICES
ENGINEER: MOTOROLA	BLOCK TITLE: imagers
LAST MODIFIED BY: MOTOROLA Thu Aug 01 15:53:44 2019	
MOTOROLA CONFIDENTIAL RESTRICTED	B — PROJECT NAME: sr28c55256_a_191107.cpm — REV: 03
THE DRAWING ON THIS PRINT AND INFORMATION THEREWITH ARE PROPRIETARY TO MOTOROLA AND SHALL NOT BE USED OR DISCUSSED IN WHOLE OR IN PART WITHOUT MOTOROLA'S CONSENT.	CAD FILE NAME:
© COPYRIGHT, MOTOROLA. THIS DOES NOT IMPLY PUBLICATION	PAGE 35 OF 63

CAM:REAR MAIN CAMERA
REF:5000-5299

CONTROL

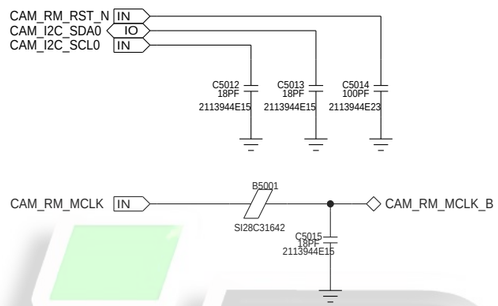

POWER

SOFIA+,R5001 DNI
SOFIA, R5000 DNI

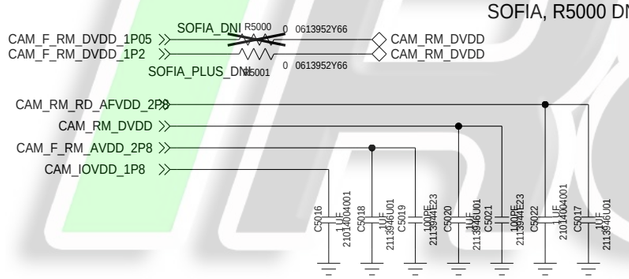

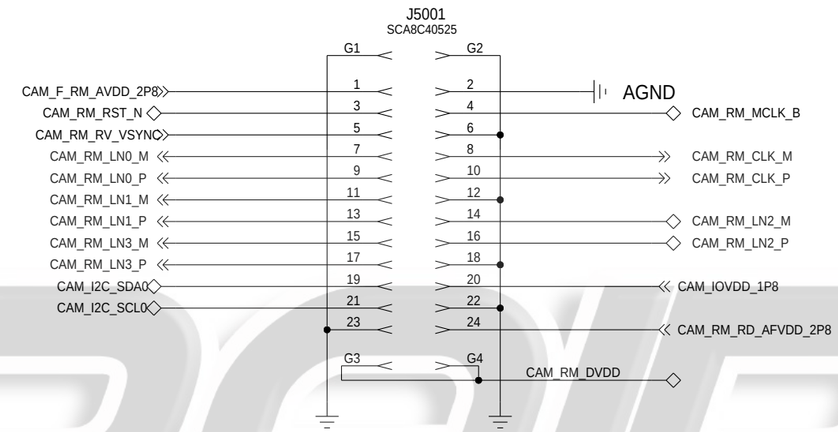

SOFIA,16M(OV16E10)
SENSOR:0X6C(W)/0X6D
AF:0X18(W)/0X19
EEPROM:0XA0(W)/0XA1

SOFIA+,48M(4IN1,S5KGM1SP)
SENSOR:0X20(W)/0X21
AF:0X18(W)/0X19
EEPROM:0XB0(W)/0XB1

SOFIA+, REARMAIN 48MP, CAM_DVDD = 1.05V
SOFIA, REARMAIN 16MP, CAM_DVDD = 1.2V

APPROVALS	MOTOROLA MOBILE DEVICES	
ENGINEER: MOTOROLA	BLOCK TITLE: imagers	
LAST MODIFIED BY: MOTOROLA Thu Aug 01 15:53:44 2019		
MOTOROLA CONFIDENTIAL RESTRICTED	B	PROJECT NAME sr28c55256_a_191107.cpm	REV 03
THE DRAWING ON THIS PRINT AND INFORMATION THEREWITH ARE PROPRIETARY TO MOTOROLA AND SHALL NOT BE USED OR DISCUSSED IN WHOLE OR IN PART WITHOUT MOTOROLA'S CONSENT.	CAD FILE NAME:	PAGE 36 OF 63

© COPYRIGHT, MOTOROLA. THIS DOES NOT IMPLY PUBLICATION

CAM:REAR DEPTH CAMERA

REF:5000-5299

CONTROL

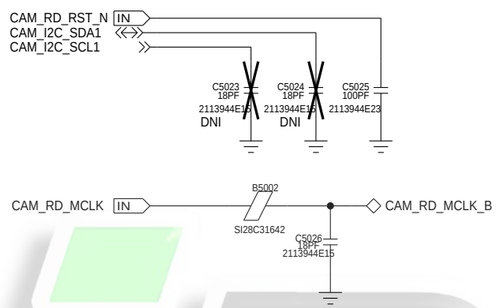

POWER

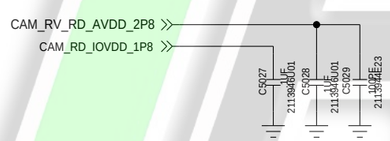

MIPI

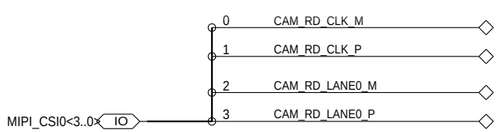

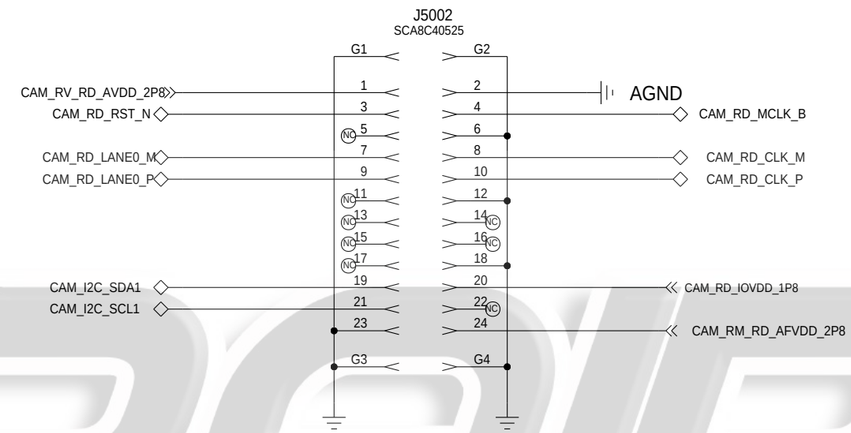

SOFIA & SOFIA+,2M(OV02A10)
SENSOR:0X7A(W)/0X7B
EEPROM:0XA0(W)/0XA1

iRepair

APPROVALS	MOTOROLA MOBILE DEVICES
ENGINEER: MOTOROLA	BLOCK TITLE: imagers
LAST MODIFIED BY: MOTOROLA Mon Sep 02 09:09:54 2019	
MOTOROLA CONFIDENTIAL RESTRICTED	B — PROJECT NAME: sr28c55256_a_191107.cpm — REV: 03
THE DRAWING ON THIS PRINT AND INFORMATION THEREWITH ARE PROPRIETARY TO MOTOROLA AND SHALL NOT BE USED OR DISCUSSED IN WHOLE OR IN PART WITHOUT MOTOROLA'S CONSENT.	CAD FILE NAME:
© COPYRIGHT, MOTOROLA. THIS DOES NOT IMPLY PUBLICATION	PAGE 37 OF 63

CAM:REAR WIDE CAMERA

REF:5000-5299

CONTROL

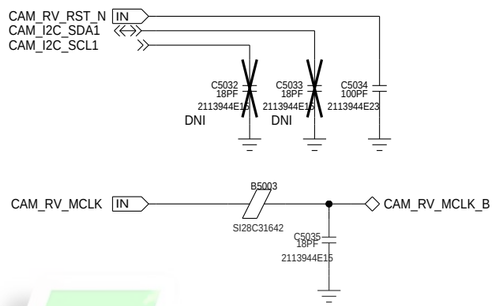

POWER

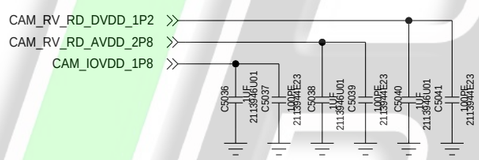

MIPI

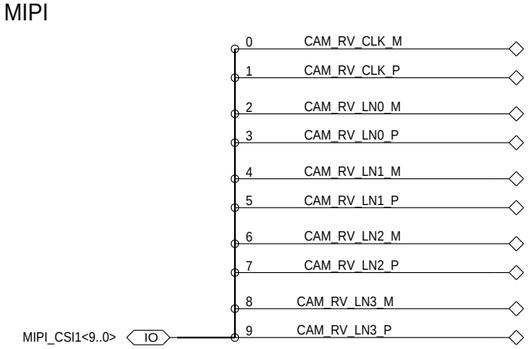

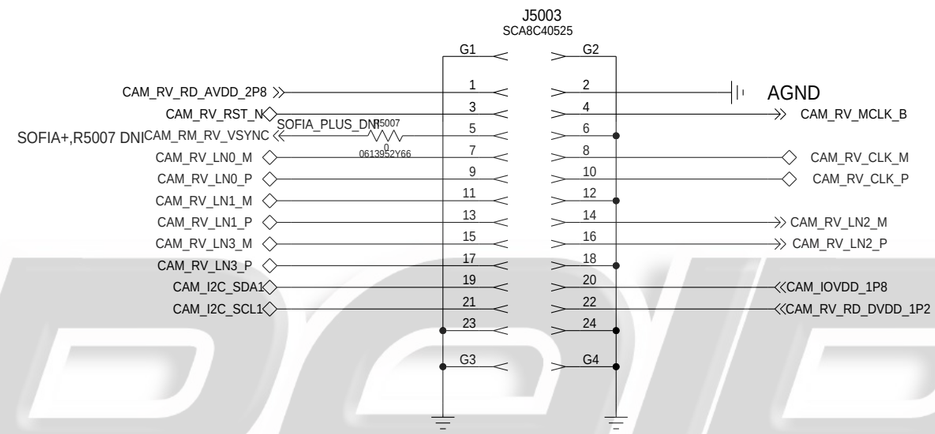

SOFIA,8M(S5K4H7YX03)
SENSOR:0X5A(W)/0X5B
(NO EEPROM)

SOFIA+,16M(OV16885-4C)
SENSOR:0X6C(W)/0X6D
EEPROM:0XA4(W)/0XA5

iREPAIR

APPROVALS	MOTOROLA MOBILE DEVICES
ENGINEER: MOTOROLA	BLOCK TITLE: imagers
LAST MODIFIED BY: MOTOROLA Mon Sep 02 09:09:03 2019	
MOTOROLA CONFIDENTIAL RESTRICTED	B — PROJECT NAME: sr28c55256_a_191107.cpm — REV: 03
THE DRAWING ON THIS PRINT AND INFORMATION THEREWITH ARE PROPRIETARY TO MOTOROLA AND SHALL NOT BE USED OR DISCUSSED IN WHOLE OR IN PART WITHOUT MOTOROLA'S CONSENT.	CAD FILE NAME:
© COPYRIGHT, MOTOROLA. THIS DOES NOT IMPLY PUBLICATION	PAGE 38 OF 63

FPS CONNECTOR

REF: 6100-6199

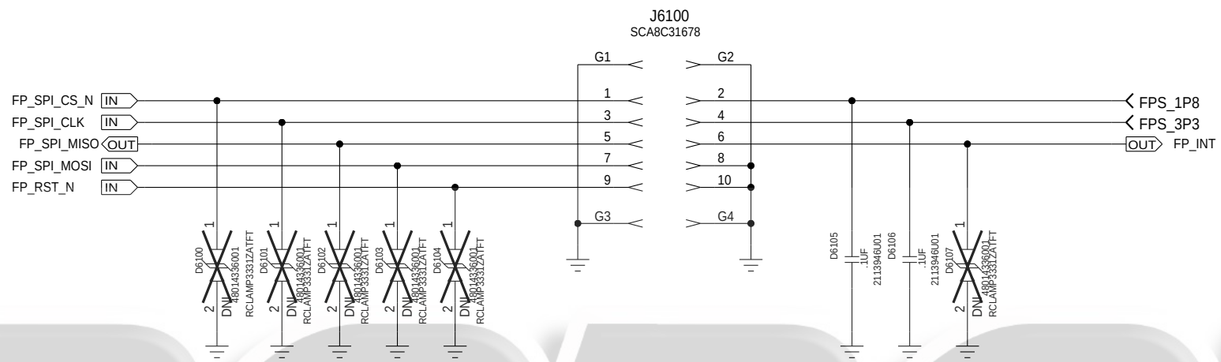

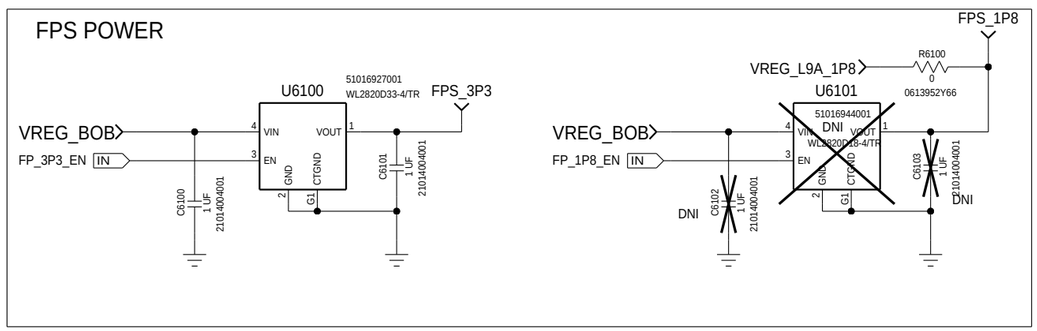

APPROVALS	MOTOROLA MOBILE DEVICES
ENGINEER: MOTOROLA	BLOCK TITLE: sensor
LAST MODIFIED BY: MOTOROLA Mon Aug 19 14:50:29 2019	
MOTOROLA CONFIDENTIAL RESTRICTED	B — PROJECT NAME: sr28c55256_a_191107.cpm — REV: 03
THE DRAWING ON THIS PRINT AND INFORMATION THEREWITH ARE PROPRIETARY TO MOTOROLA AND SHALL NOT BE USED OR DISCUSSED IN WHOLE OR IN PART WITHOUT MOTOROLA'S CONSENT.	CAD FILE NAME:
© COPYRIGHT, MOTOROLA. THIS DOES NOT IMPLY PUBLICATION	PAGE 39 OF 63

iREPAIR

SENSORS

REF: 6000-6099

ACCELEROMETER/GYROSCOPE

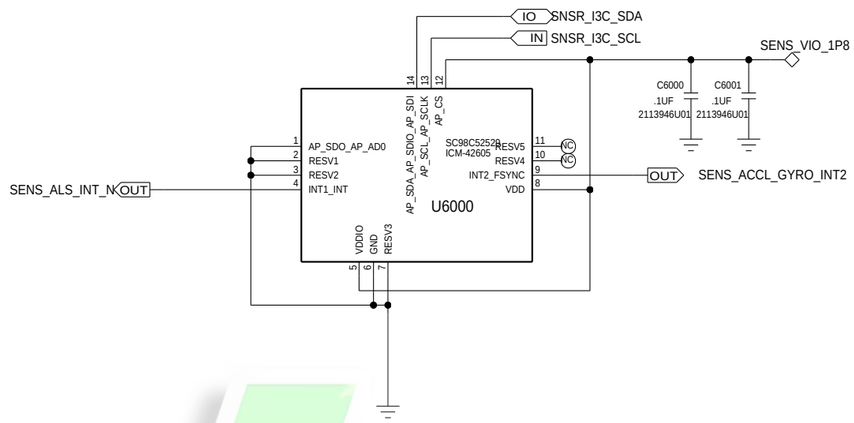

PROXIMITY/AMBIENT LIGHT/SOL FLEX INTERFACE

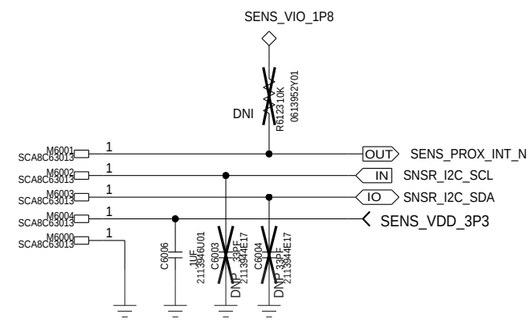

SENSOR POWER

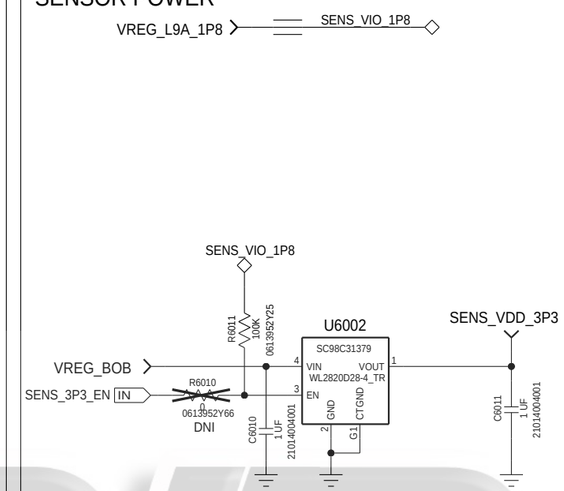

CAP SENSOR

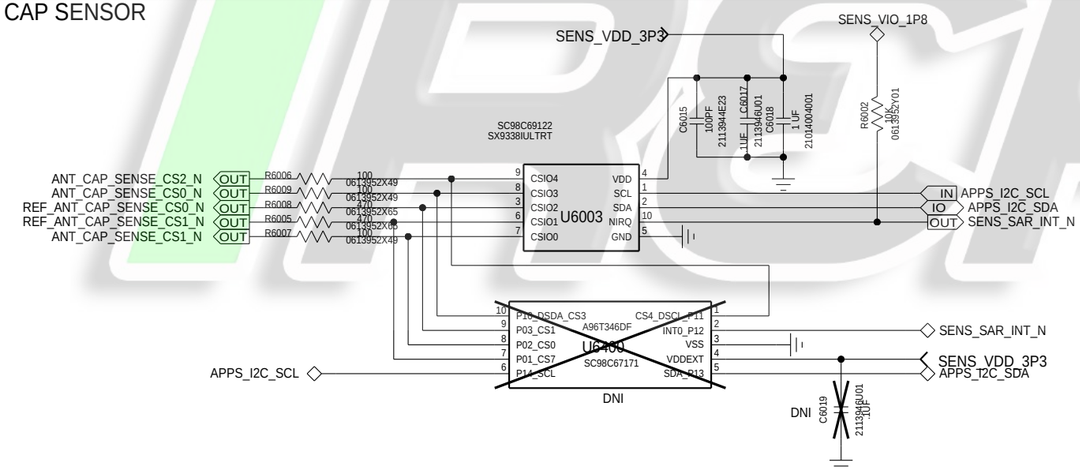

QUIET TEMP SENSOR

M SENSOR

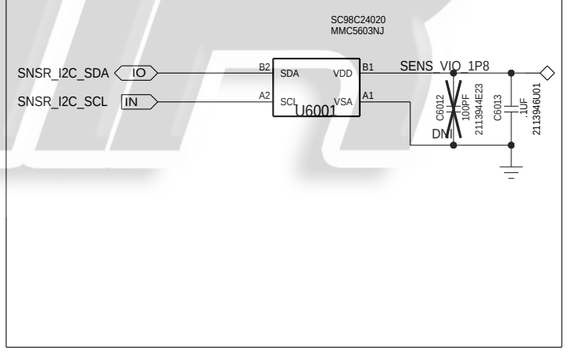

APPROVALS	MOTOROLA MOBILE DEVICES
ENGINEER: MOTOROLA	BLOCK TITLE: sensor
LAST MODIFIED BY: MOTOROLA Wed Oct 09 08:53:18 2019	
MOTOROLA CONFIDENTIAL RESTRICTED	B — PROJECT NAME: sr28c55256_a_191107.cpm — REV: 03
THE DRAWING ON THIS PRINT AND INFORMATION THEREWITH ARE PROPRIETARY TO MOTOROLA AND SHALL NOT BE USED OR DISCUSSED IN WHOLE OR IN PART WITHOUT MOTOROLA'S CONSENT. © COPYRIGHT, MOTOROLA. THIS DOES NOT IMPLY PUBLICATION	CAD FILE NAME:

IRGPAIR

SM6125: CONTROL

REF:1000-1999

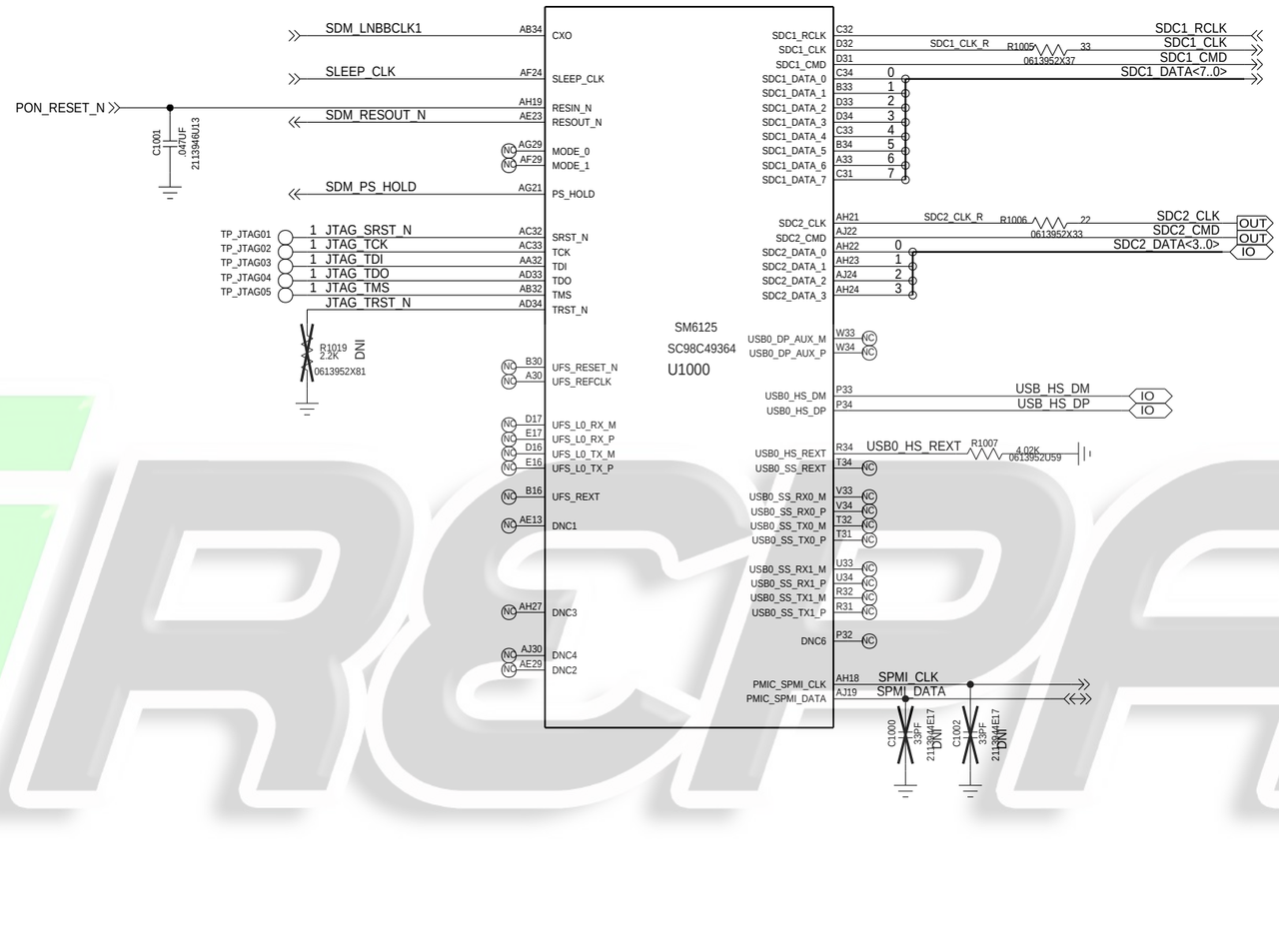

APPROVALS	MOTOROLA MOBILE DEVICES
ENGINEER: MOTOROLA	BLOCK TITLE: ap_pmic
LAST MODIFIED BY: MOTOROLA Thu Aug 29 16:18:06 2019	
MOTOROLA CONFIDENTIAL RESTRICTED	B — PROJECT NAME: sr28c55256_a_191107.cpm — REV: 03
THE DRAWING ON THIS PRINT AND INFORMATION THEREWITH ARE PROPRIETARY TO MOTOROLA AND SHALL NOT BE USED OR DISCUSSED IN WHOLE OR IN PART WITHOUT MOTOROLA'S CONSENT. © COPYRIGHT, MOTOROLA. THIS DOES NOT IMPLY PUBLICATION	CAD FILE NAME: — PAGE 41 OF 63

iRepair

SM6125: GPIOS

REF:1000-1999

REVISIONS				
ZONE	LTR	DESCRIPTION	DATE	APPR.

MOT BOARD ID

FOR RUNTIME REVISION INFORMATION, REFER TO:
https://sites.google.com/a/motorola.com/runtime-product-ids

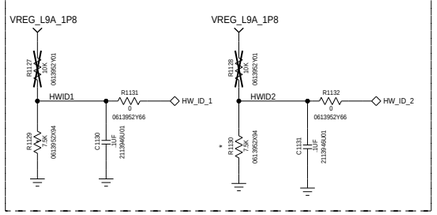

I2C BUS PULL-UPS

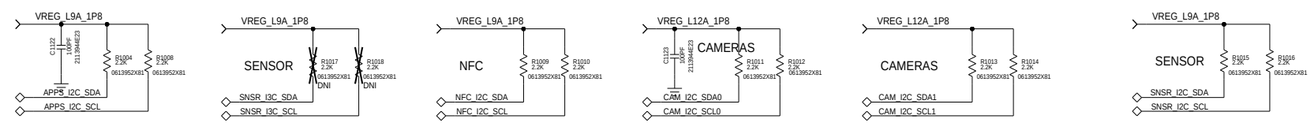

APPROVALS	MOTOROLA MOBILE DEVICES
ENGINEER: MOTOROLA	BLOCK TITLE: ap_pmic
LAST MODIFIED BY: MOTOROLA Thu Aug 29 16:24:58 2019	
MOTOROLA CONFIDENTIAL RESTRICTED THE DRAWING ON THIS PRINT AND INFORMATION THEREWITH ARE PROPRIETARY TO MOTOROLA AND SHALL NOT BE USED OR DISCUSSED IN WHOLE OR IN PART WITHOUT MOTOROLA'S CONSENT. © COPYRIGHT, MOTOROLA. THIS DOES NOT IMPLY PUBLICATION	C — PROJECT NAME: sr28c55256_a_191107.cpm — REV: 03 CAD FILE NAME: — PAGE 42 of 63

SM6125: MIPI/DSI/CSI/EBI0

REF:1000-1999

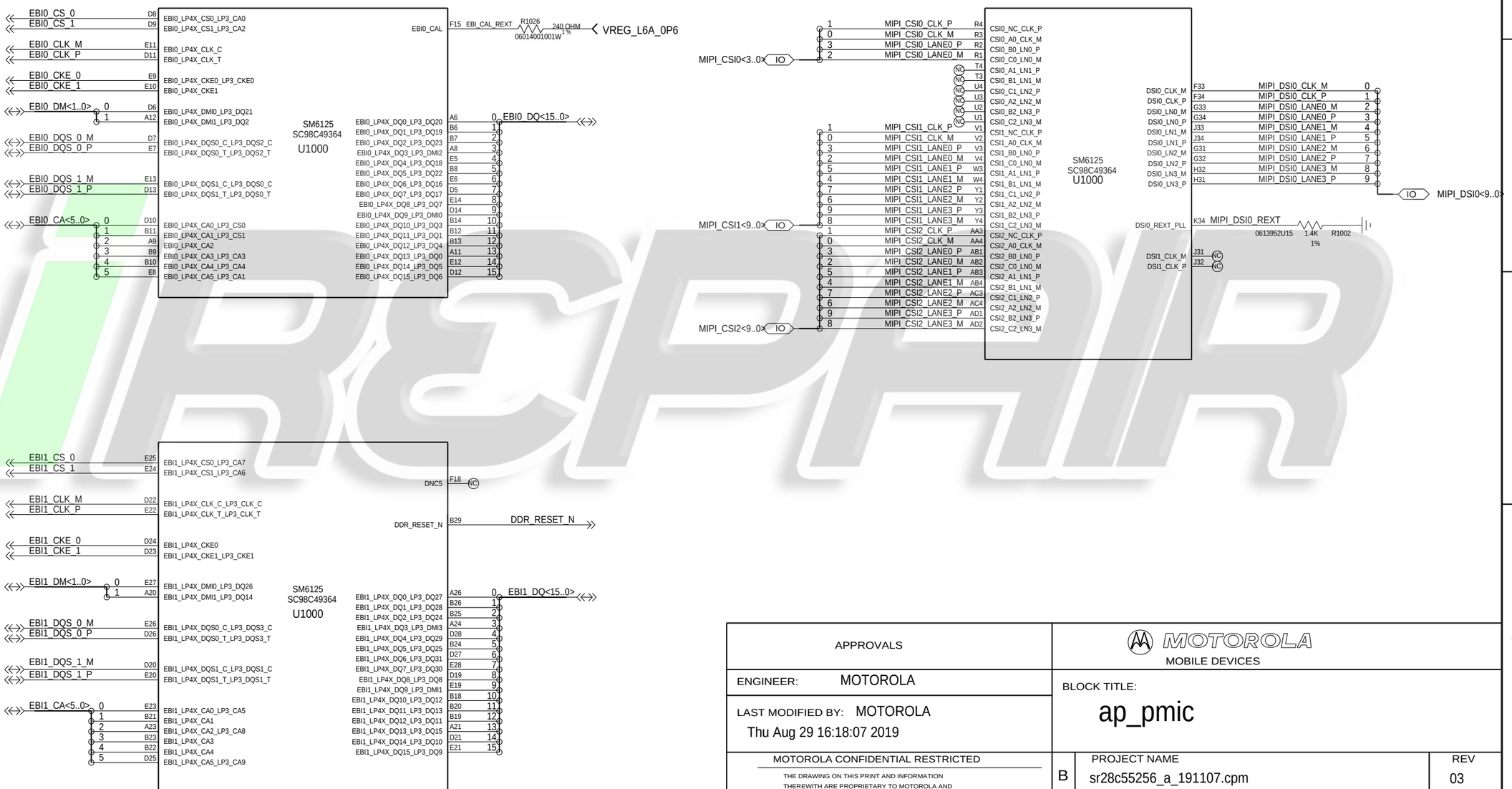

APPROVALS	MOTOROLA MOBILE DEVICES
ENGINEER: MOTOROLA	BLOCK TITLE: ap_pmic
LAST MODIFIED BY: MOTOROLA Thu Aug 29 16:18:07 2019	
MOTOROLA CONFIDENTIAL RESTRICTED	PROJECT NAME: sr28c55256_a_191107.cpm — REV: 03
THE DRAWING ON THIS PRINT AND INFORMATION THEREWITH ARE PROPRIETARY TO MOTOROLA AND SHALL NOT BE USED OR DISCUSSED IN WHOLE OR IN PART WITHOUT MOTOROLA'S CONSENT. © COPYRIGHT, MOTOROLA. THIS DOES NOT IMPLY PUBLICATION	CAD FILE NAME:

SM6125: WCSS/RF

REF:1000-1999

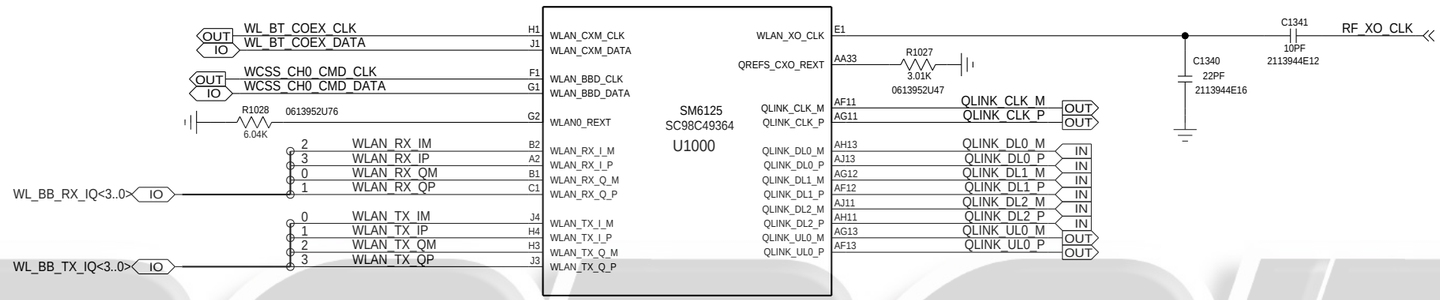

iREPAIR

APPROVALS	MOTOROLA MOBILE DEVICES
ENGINEER: MOTOROLA	BLOCK TITLE: ap_pmic
LAST MODIFIED BY: MOTOROLA Thu Aug 29 16:18:07 2019	
MOTOROLA CONFIDENTIAL RESTRICTED	B PROJECT NAME sr28c55256_a_191107.cpm REV 03
THE DRAWING ON THIS PRINT AND INFORMATION THEREWITH ARE PROPRIETARY TO MOTOROLA AND SHALL NOT BE USED OR DISCUSSED IN WHOLE OR IN PART WITHOUT MOTOROLA'S CONSENT. © COPYRIGHT, MOTOROLA. THIS DOES NOT IMPLY PUBLICATION	CAD FILE NAME: PAGE 44 OF 63

SM6125: PWR1/PWR2

REF:1000-1999

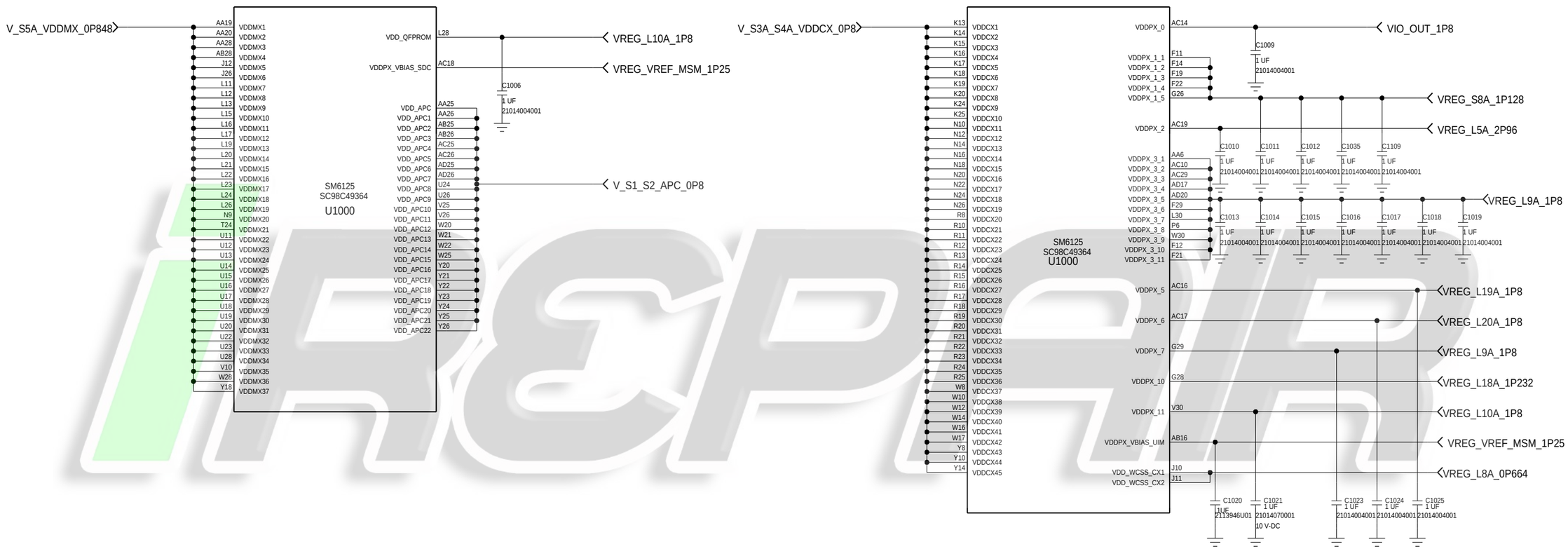

APPROVALS	MOTOROLA MOBILE DEVICES
ENGINEER: MOTOROLA	BLOCK TITLE: ap_pmic
LAST MODIFIED BY: MOTOROLA Thu Aug 29 16:18:08 2019	
MOTOROLA CONFIDENTIAL RESTRICTED	B — PROJECT NAME: sr28c55256_a_191107.cpm — REV: 03
THE DRAWING ON THIS PRINT AND INFORMATION THEREWITH ARE PROPRIETARY TO MOTOROLA AND SHALL NOT BE USED OR DISCUSSED IN WHOLE OR IN PART WITHOUT MOTOROLA'S CONSENT. © COPYRIGHT, MOTOROLA. THIS DOES NOT IMPLY PUBLICATION	CAD FILE NAME:
	PAGE 45 OF 63

SM6125: PWR3

REF:1000-1999

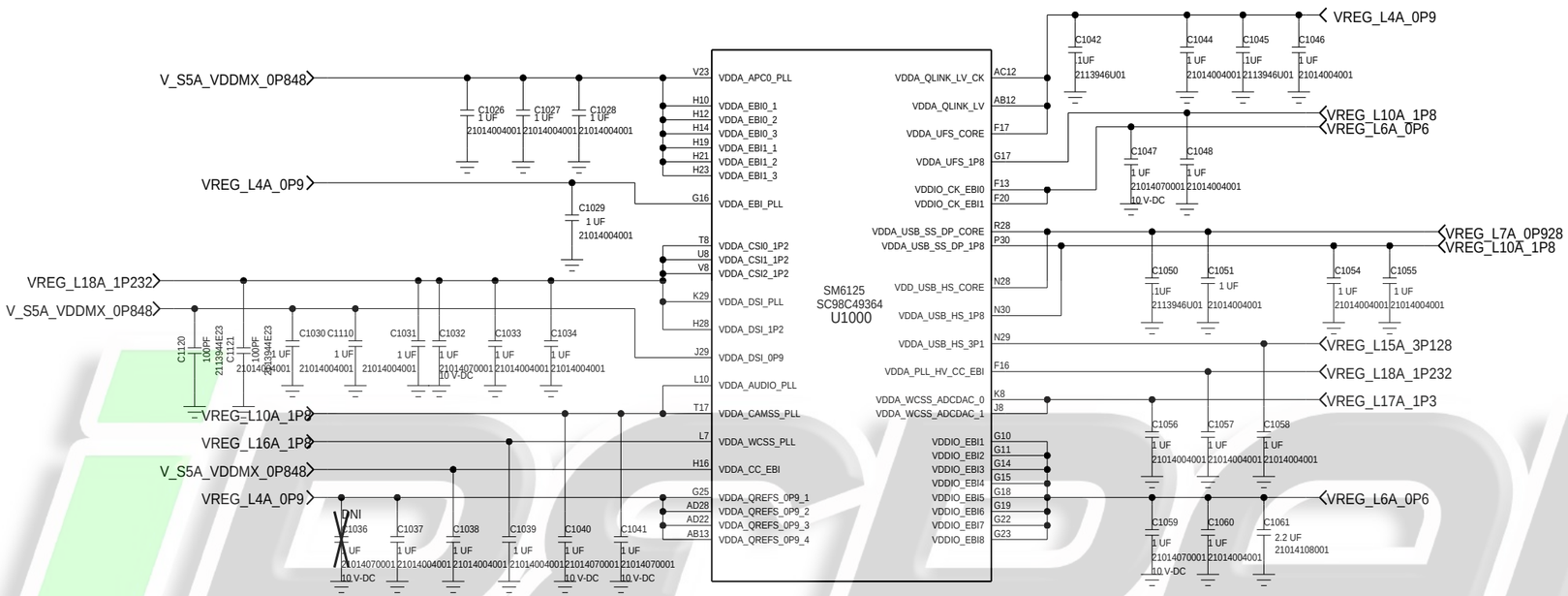

APPROVALS	MOTOROLA MOBILE DEVICES
ENGINEER: MOTOROLA	BLOCK TITLE: ap_pmic
LAST MODIFIED BY: MOTOROLA Thu Aug 29 16:18:08 2019	
MOTOROLA CONFIDENTIAL RESTRICTED	B — PROJECT NAME: sr28c55256_a_191107.cpm — REV: 03
THE DRAWING ON THIS PRINT AND INFORMATION THEREWITH ARE PROPRIETARY TO MOTOROLA AND SHALL NOT BE USED OR DISCUSSED IN WHOLE OR IN PART WITHOUT MOTOROLA'S CONSENT. © COPYRIGHT, MOTOROLA. THIS DOES NOT IMPLY PUBLICATION	CAD FILE NAME:
	PAGE 46 OF 63

iRepair

SM6125: DECAPS

REF:1000-1999

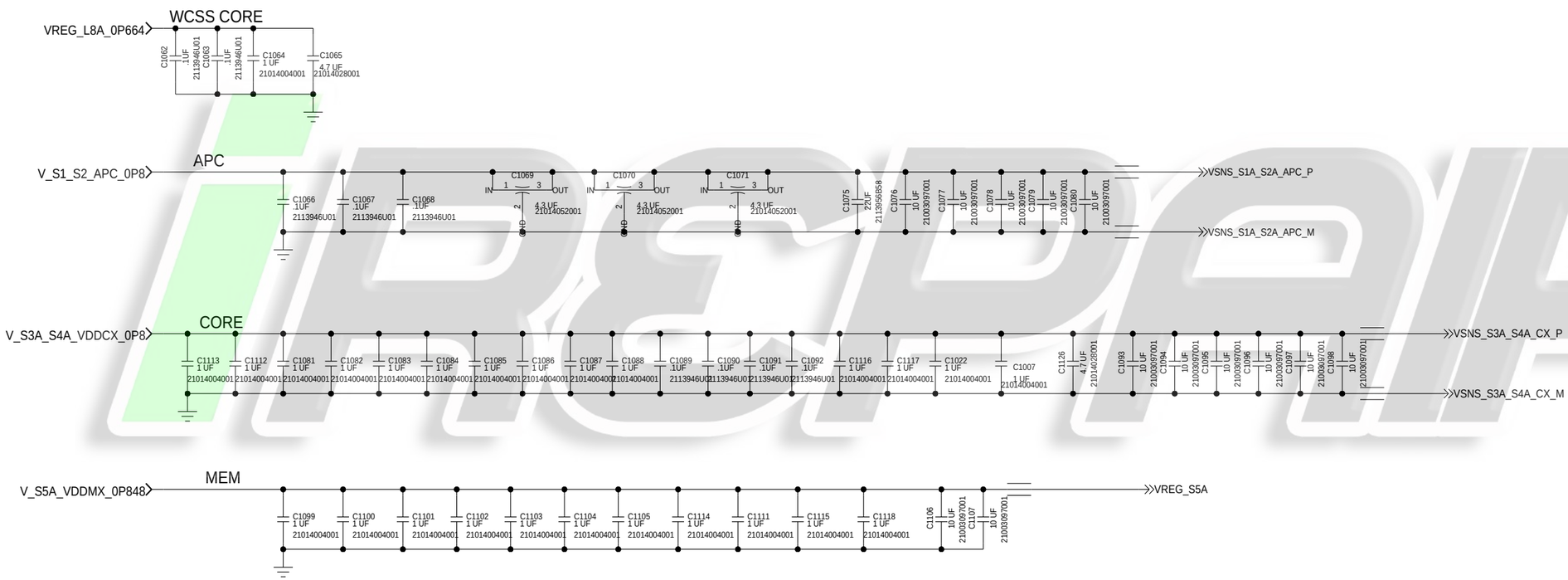

APPROVALS	MOTOROLA MOBILE DEVICES
ENGINEER: MOTOROLA	BLOCK TITLE: ap_pmic
LAST MODIFIED BY: MOTOROLA Wed Sep 11 10:15:55 2019	
MOTOROLA CONFIDENTIAL RESTRICTED	B — PROJECT NAME: sr28c55256_a_191107.cpm — REV: 03
THE DRAWING ON THIS PRINT AND INFORMATION THEREWITH ARE PROPRIETARY TO MOTOROLA AND SHALL NOT BE USED OR DISCUSSED IN WHOLE OR IN PART WITHOUT MOTOROLA'S CONSENT. © COPYRIGHT, MOTOROLA. THIS DOES NOT IMPLY PUBLICATION	CAD FILE NAME:

PLATFORM

SM6125: GND

REF:1000-1999

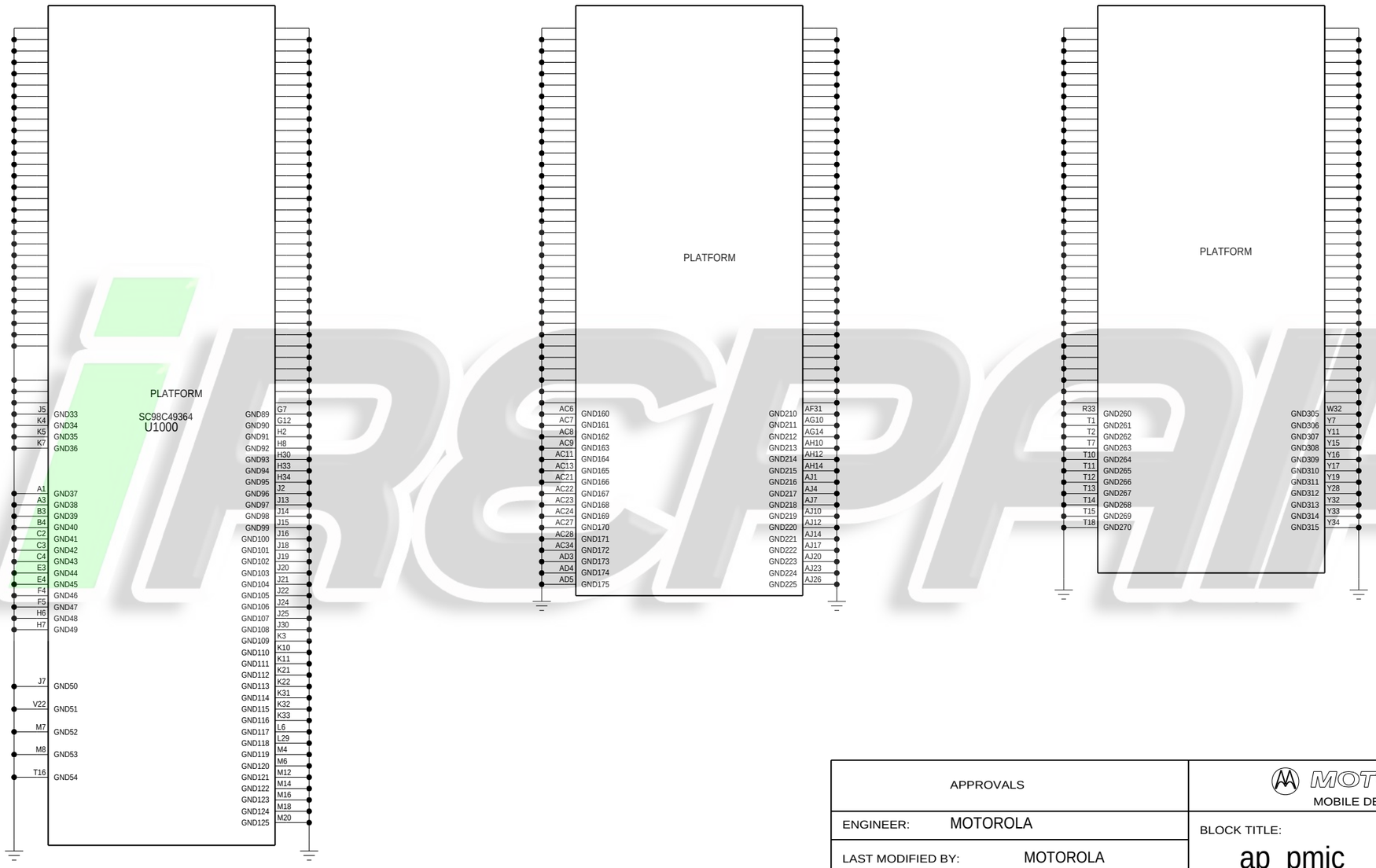

APPROVALS	MOTOROLA MOBILE DEVICES
ENGINEER: MOTOROLA	BLOCK TITLE: ap_pmic
LAST MODIFIED BY: MOTOROLA Thu Aug 29 16:18:09 2019	
MOTOROLA CONFIDENTIAL RESTRICTED	PROJECT NAME: sr28c55256_a_191107.cpm (B) — REV: 03
THE DRAWING ON THIS PRINT AND INFORMATION THEREWITH ARE PROPRIETARY TO MOTOROLA AND SHALL NOT BE USED OR DISCUSSED IN WHOLE OR IN PART WITHOUT MOTOROLA'S CONSENT.	CAD FILE NAME:
© COPYRIGHT, MOTOROLA. THIS DOES NOT IMPLY PUBLICATION	PAGE 48 OF 63

IRREPAIR

SM6150: DEBUG

REF:1000-1999

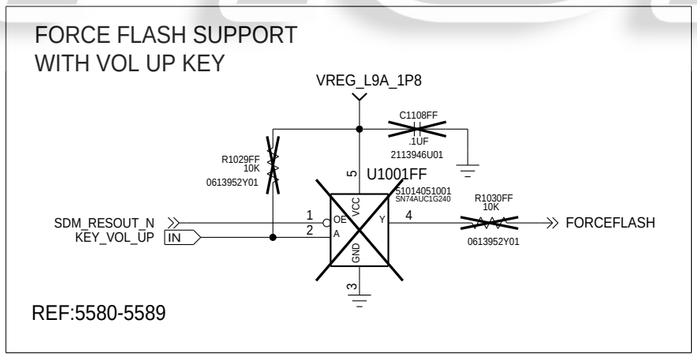

APPROVALS	MOTOROLA MOBILE DEVICES
ENGINEER: MOTOROLA	BLOCK TITLE: ap_pmic
LAST MODIFIED BY: MOTOROLA Thu Aug 29 16:18:09 2019	
MOTOROLA CONFIDENTIAL RESTRICTED	B — PROJECT NAME: sr28c55256_a_191107.cpm — REV: 03
	CAD FILE NAME: — PAGE 49 OF 63

THE DRAWING ON THIS PRINT AND INFORMATION THEREWITH ARE PROPRIETARY TO MOTOROLA AND SHALL NOT BE USED OR DISCUSSED IN WHOLE OR IN PART WITHOUT MOTOROLA'S CONSENT.
© COPYRIGHT, MOTOROLA. THIS DOES NOT IMPLY PUBLICATION

MEMORY: EMCP

REF: 1600-1699

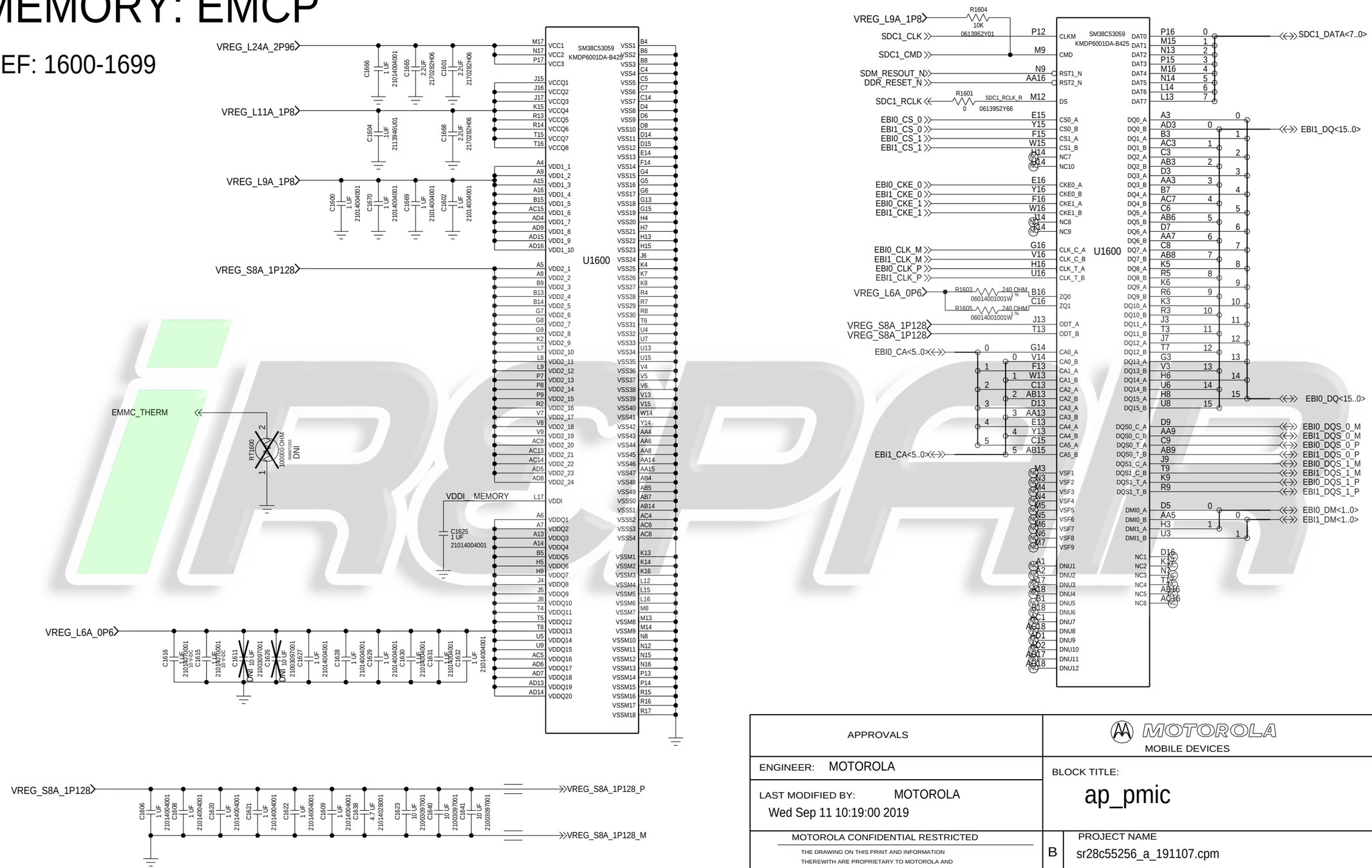

APPROVALS	MOTOROLA MOBILE DEVICES
ENGINEER: MOTOROLA	BLOCK TITLE: ap_pmic
LAST MODIFIED BY: MOTOROLA Wed Sep 11 10:19:00 2019	
MOTOROLA CONFIDENTIAL RESTRICTED	B — PROJECT NAME: sr28c55256_a_191107.cpm — REV: 03
THE DRAWING ON THIS PRINT AND INFORMATION THEREWITH ARE PROPRIETARY TO MOTOROLA AND SHALL NOT BE USED OR DISCUSSED IN WHOLE OR IN PART WITHOUT MOTOROLA'S CONSENT. © COPYRIGHT, MOTOROLA. THIS DOES NOT IMPLY PUBLICATION	CAD FILE NAME:
	PAGE 50 OF 63

iRepair

PM6125: CTRL/GND/GPIOS

REF: 2000-2399

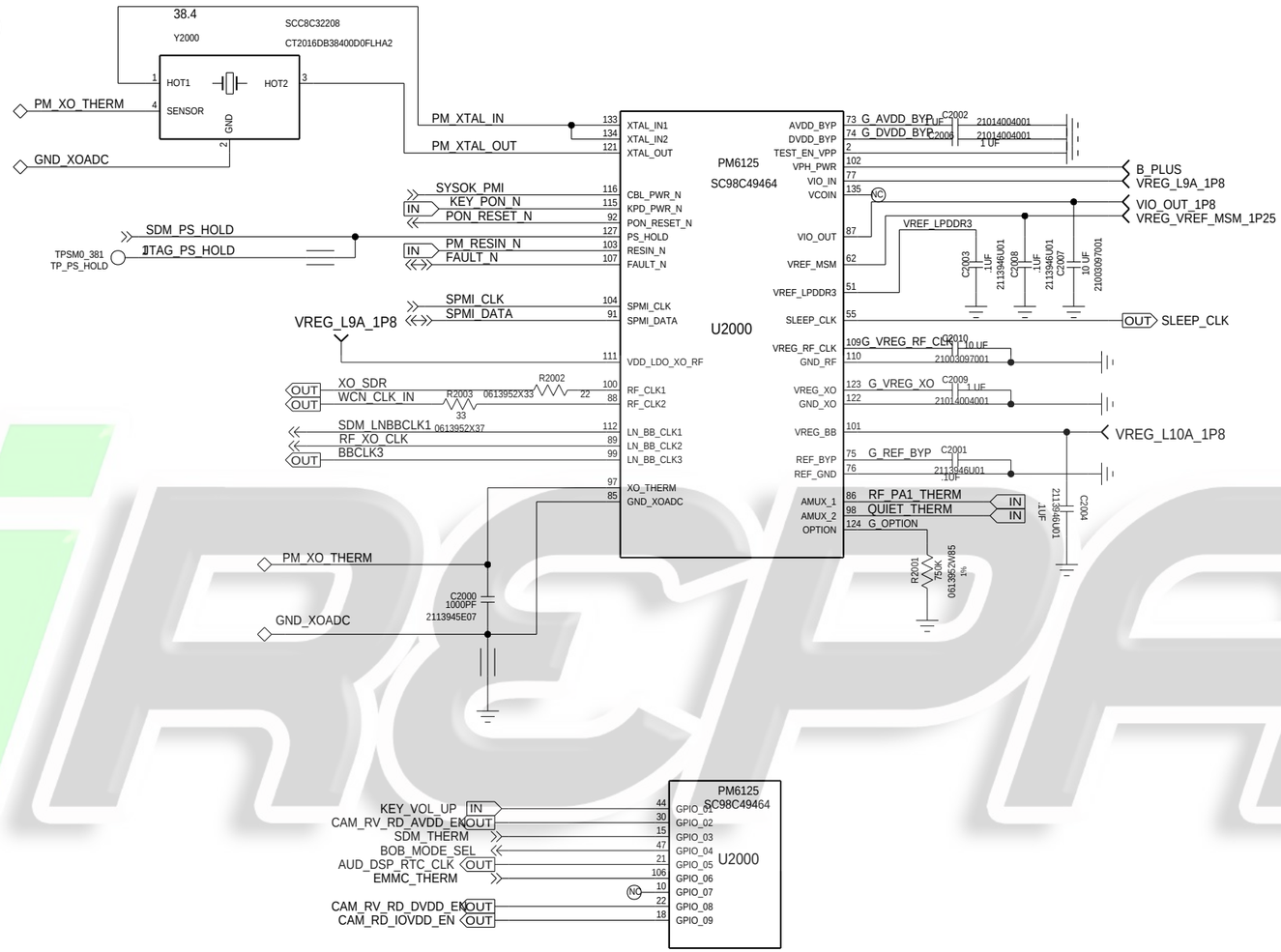

APPROVALS	MOTOROLA MOBILE DEVICES
ENGINEER: MOTOROLA	BLOCK TITLE: ap_pmic
LAST MODIFIED BY: MOTOROLA Thu Aug 29 16:18:10 2019	
MOTOROLA CONFIDENTIAL RESTRICTED	B — PROJECT NAME: sr28c55256_a_191107.cpm — REV: 03
THE DRAWING ON THIS PRINT AND INFORMATION THEREWITH ARE PROPRIETARY TO MOTOROLA AND SHALL NOT BE USED OR DISCUSSED IN WHOLE OR IN PART WITHOUT MOTOROLA'S CONSENT. © COPYRIGHT, MOTOROLA. THIS DOES NOT IMPLY PUBLICATION	CAD FILE NAME:
	PAGE 51 OF 63

iRepair

PM6125: SMPS-1

REF: 2000-2399

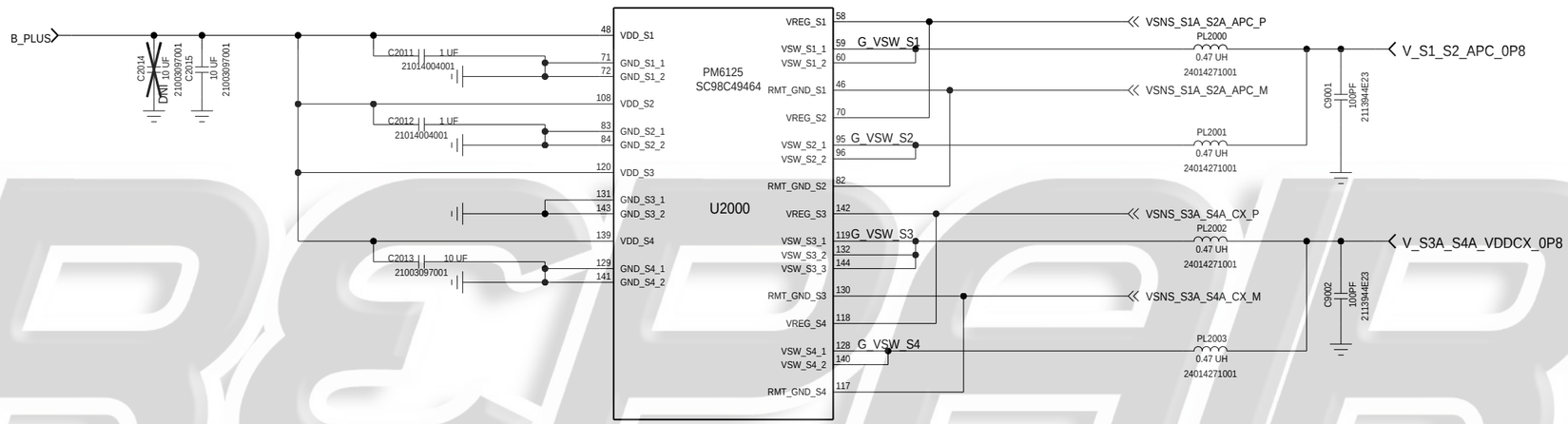

iREPAIR

APPROVALS	MOTOROLA MOBILE DEVICES
ENGINEER: MOTOROLA	BLOCK TITLE: ap_pmic
LAST MODIFIED BY: MOTOROLA Fri Sep 06 10:59:28 2019	
MOTOROLA CONFIDENTIAL RESTRICTED	B — PROJECT NAME: sr28c55256_a_191107.cpm — REV: 03
THE DRAWING ON THIS PRINT AND INFORMATION THEREWITH ARE PROPRIETARY TO MOTOROLA AND SHALL NOT BE USED OR DISCUSSED IN WHOLE OR IN PART WITHOUT MOTOROLA'S CONSENT.	CAD FILE NAME:
© COPYRIGHT, MOTOROLA. THIS DOES NOT IMPLY PUBLICATION	PAGE 52 OF 63

PM6125: SMPS-2

REF: 2000-2399

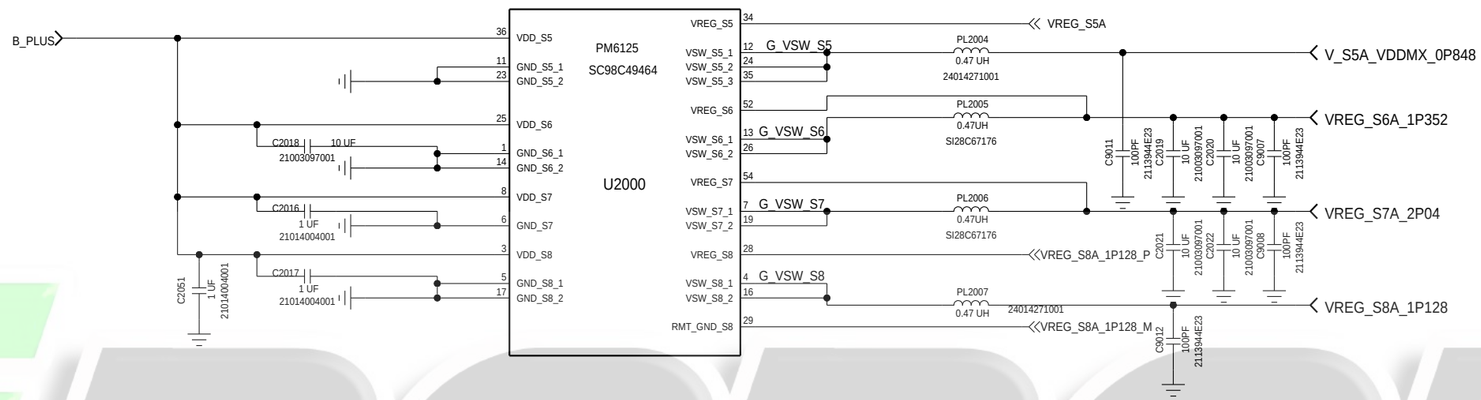

iREPAIR

APPROVALS	MOTOROLA MOBILE DEVICES
ENGINEER: MOTOROLA	BLOCK TITLE: ap_pmic
LAST MODIFIED BY: MOTOROLA Fri Sep 06 11:00:22 2019	
MOTOROLA CONFIDENTIAL RESTRICTED	B PROJECT NAME sr28c55256_a_191107.cpm REV 03
THE DRAWING ON THIS PRINT AND INFORMATION THEREWITH ARE PROPRIETARY TO MOTOROLA AND SHALL NOT BE USED OR DISCUSSED IN WHOLE OR IN PART WITHOUT MOTOROLA'S CONSENT.	CAD FILE NAME:
© COPYRIGHT, MOTOROLA. THIS DOES NOT IMPLY PUBLICATION	PAGE 53 OF 63

PM6125: LDOS

REF: 2300-2399

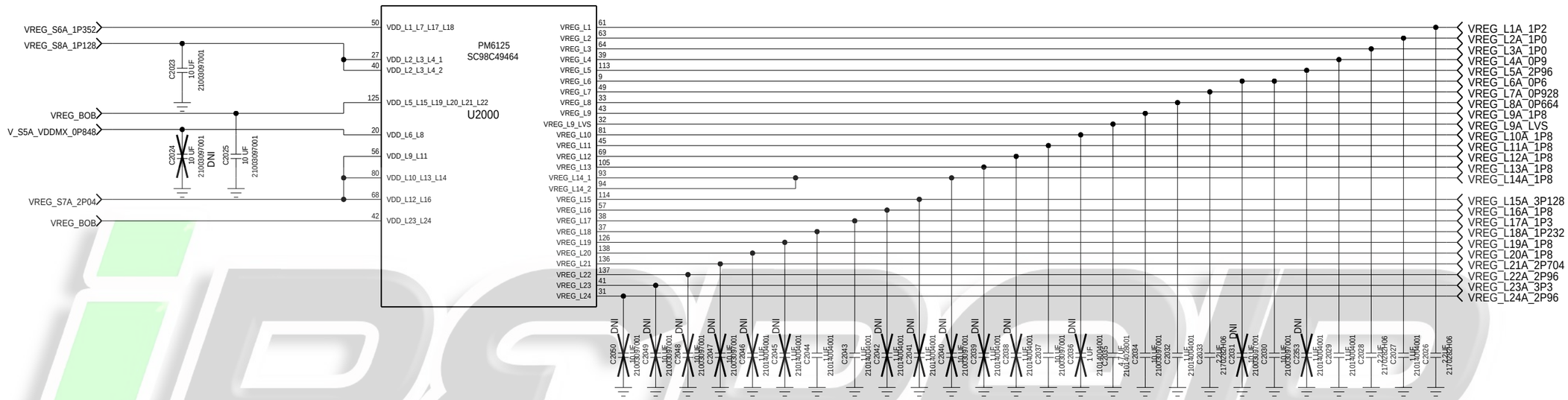

APPROVALS	MOTOROLA MOBILE DEVICES
ENGINEER: MOTOROLA	BLOCK TITLE: ap_pmic
LAST MODIFIED BY: MOTOROLA Fri Sep 06 13:56:03 2019	
MOTOROLA CONFIDENTIAL RESTRICTED	B PROJECT NAME sr28c55256_a_191107.cpm REV 03
THE DRAWING ON THIS PRINT AND INFORMATION THEREWITH ARE PROPRIETARY TO MOTOROLA AND SHALL NOT BE USED OR DISCUSSED IN WHOLE OR IN PART WITHOUT MOTOROLA'S CONSENT. © COPYRIGHT, MOTOROLA. THIS DOES NOT IMPLY PUBLICATION	CAD FILE NAME: PAGE 54 OF 63

iREPAIR

PMI632: CHARGER

REF: 2400-2499

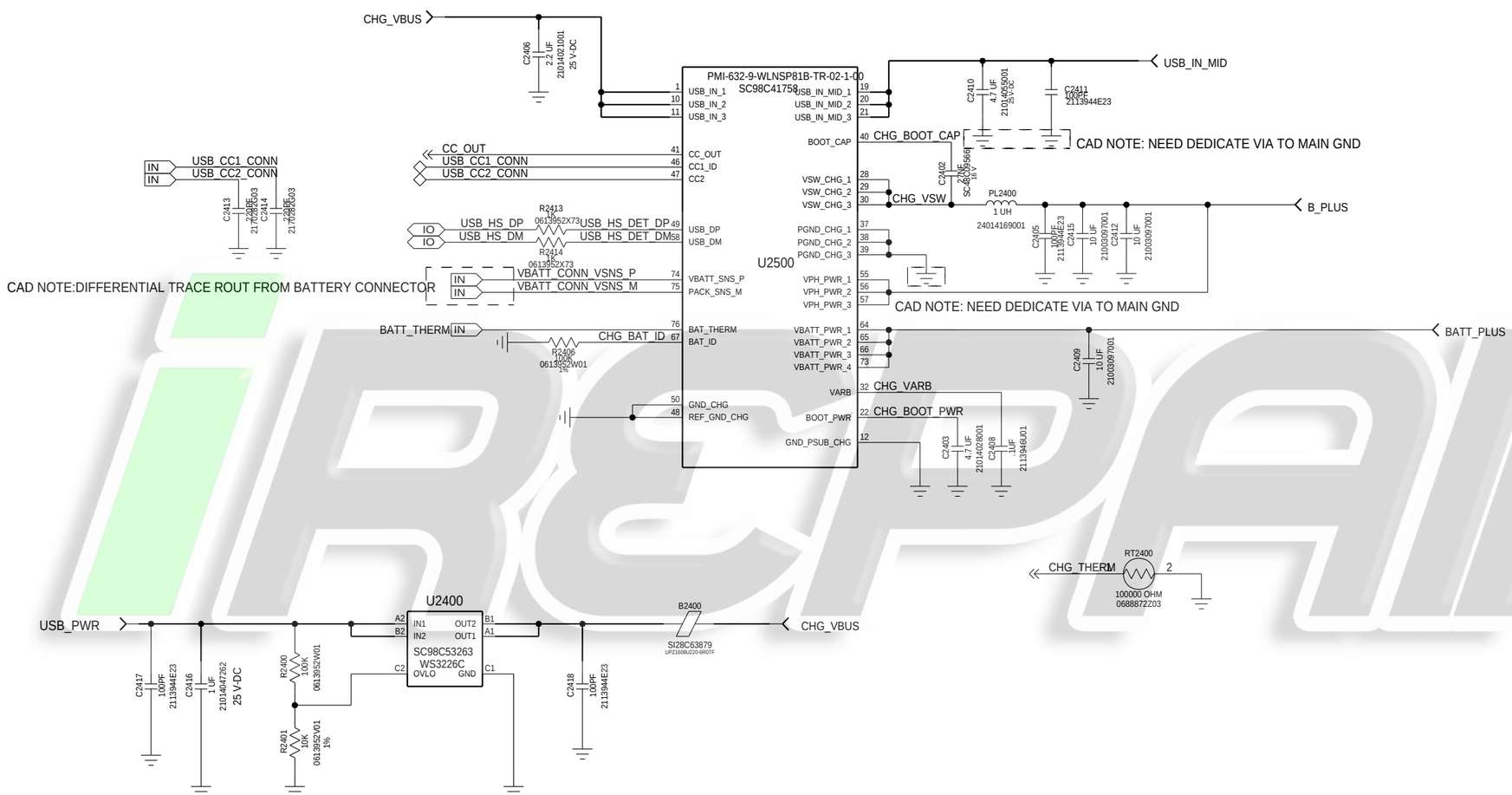

APPROVALS	MOTOROLA MOBILE DEVICES
ENGINEER: MOTOROLA	BLOCK TITLE: ap_pmic
LAST MODIFIED BY: MOTOROLA Thu Oct 17 10:46:51 2019	
MOTOROLA CONFIDENTIAL RESTRICTED	B — PROJECT NAME: sr28c55256_a_191107.cpm — REV: 03
THE DRAWING ON THIS PRINT AND INFORMATION THEREWITH ARE PROPRIETARY TO MOTOROLA AND SHALL NOT BE USED OR DISCUSSED IN WHOLE OR IN PART WITHOUT MOTOROLA'S CONSENT. © COPYRIGHT, MOTOROLA. THIS DOES NOT IMPLY PUBLICATION	CAD FILE NAME:
	PAGE 55 OF 63

iREPAIR

FAST CHARGER&FUEL GAUGE&USB PD

REF: 2400-2499

iREPAIR

APPROVALS	MOTOROLA MOBILE DEVICES
ENGINEER: MOTOROLA	BLOCK TITLE: ap_pmic
LAST MODIFIED BY: MOTOROLA Fri Jun 28 10:59:58 2019	
MOTOROLA CONFIDENTIAL RESTRICTED	B PROJECT NAME sr28c55256_a_191107.cpm REV 03
THE DRAWING ON THIS PRINT AND INFORMATION THEREWITH ARE PROPRIETARY TO MOTOROLA AND SHALL NOT BE USED OR DISCUSSED IN WHOLE OR IN PART WITHOUT MOTOROLA'S CONSENT.	CAD FILE NAME:
© COPYRIGHT, MOTOROLA. THIS DOES NOT IMPLY PUBLICATION	PAGE 56 OF 63

PMI632:CTRL/GND/ GPIOS

REF: 2500-2999

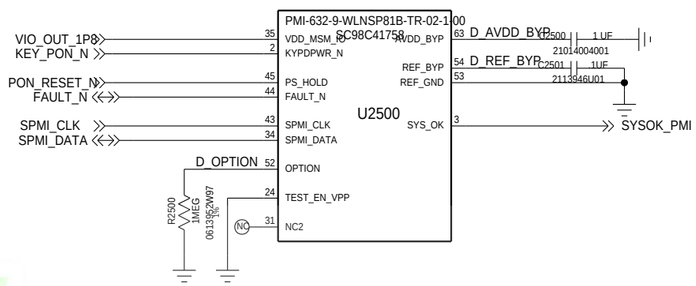

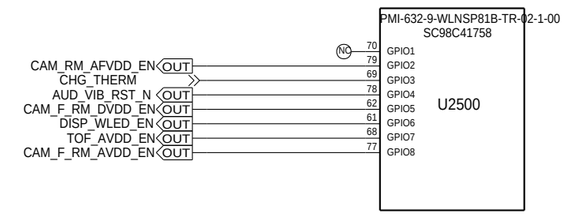

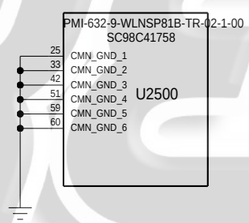

iRCPAIR

APPROVALS	MOTOROLA MOBILE DEVICES
ENGINEER: MOTOROLA	BLOCK TITLE: ap_pmic
LAST MODIFIED BY: MOTOROLA Wed Sep 18 15:17:30 2019	
MOTOROLA CONFIDENTIAL RESTRICTED	B — PROJECT NAME: sr28c55256_a_191107.cpm — REV: 03
	CAD FILE NAME: — PAGE 57 OF 63

THE DRAWING ON THIS PRINT AND INFORMATION THEREWITH ARE PROPRIETARY TO MOTOROLA AND SHALL NOT BE USED OR DISCUSSED IN WHOLE OR IN PART WITHOUT MOTOROLA'S CONSENT.
© COPYRIGHT, MOTOROLA. THIS DOES NOT IMPLY PUBLICATION

PMI632:FLASH/SOL LED&FAN48632:VREG_BOB

REF: 2500-2999

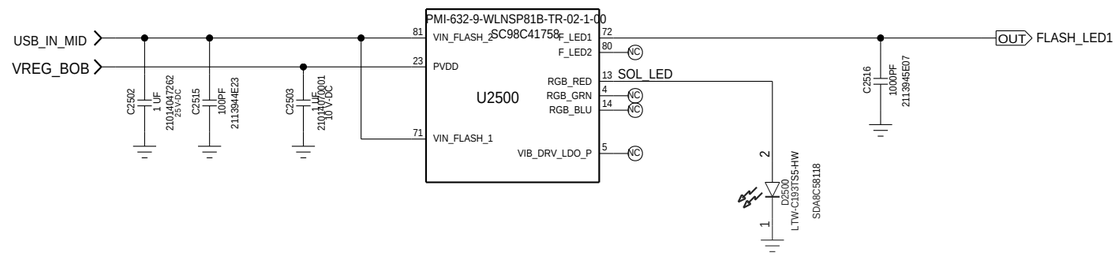

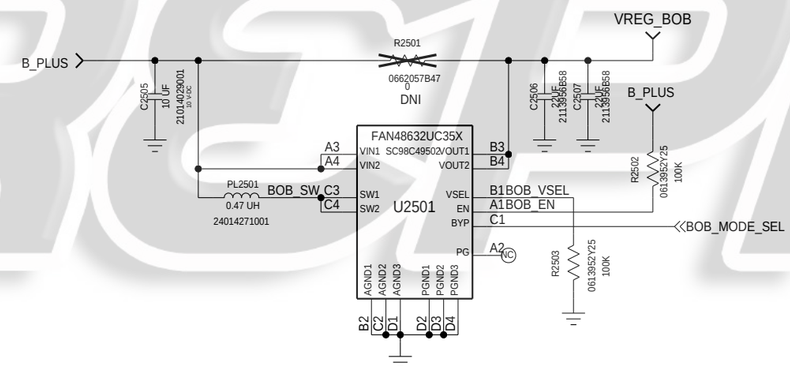

APPROVALS	MOTOROLA MOBILE DEVICES
ENGINEER: MOTOROLA	BLOCK TITLE: ap_pmic
LAST MODIFIED BY: MOTOROLA Fri Sep 06 10:59:32 2019	
MOTOROLA CONFIDENTIAL RESTRICTED	B — PROJECT NAME: sr28c55256_a_191107.cpm — REV: 03
THE DRAWING ON THIS PRINT AND INFORMATION THEREWITH ARE PROPRIETARY TO MOTOROLA AND SHALL NOT BE USED OR DISCUSSED IN WHOLE OR IN PART WITHOUT MOTOROLA'S CONSENT. © COPYRIGHT, MOTOROLA. THIS DOES NOT IMPLY PUBLICATION	CAD FILE NAME:
	PAGE 58 OF 63

iREPAIR

PMI632: VSP/VSN

REF: 2500-2999

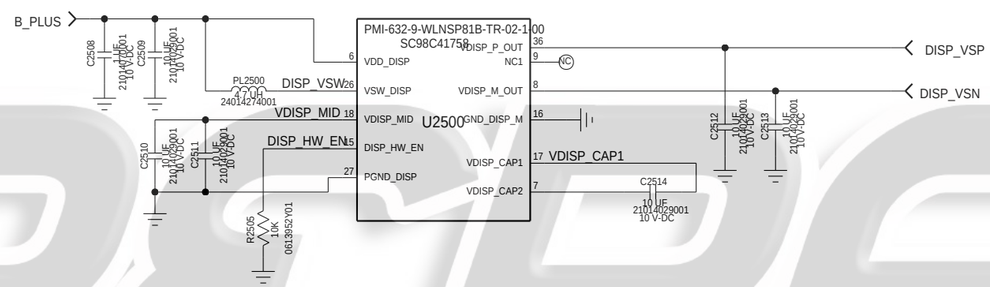

iREPAIR

APPROVALS	MOTOROLA MOBILE DEVICES
ENGINEER: MOTOROLA	BLOCK TITLE: ap_pmic
LAST MODIFIED BY: MOTOROLA Fri Sep 06 11:02:22 2019	
MOTOROLA CONFIDENTIAL RESTRICTED	B — PROJECT NAME: sr28c55256_a_191107.cpm — REV: 03
THE DRAWING ON THIS PRINT AND INFORMATION THEREWITH ARE PROPRIETARY TO MOTOROLA AND SHALL NOT BE USED OR DISCUSSED IN WHOLE OR IN PART WITHOUT MOTOROLA'S CONSENT. © COPYRIGHT, MOTOROLA. THIS DOES NOT IMPLY PUBLICATION	CAD FILE NAME:

GPS
REF7800-7899

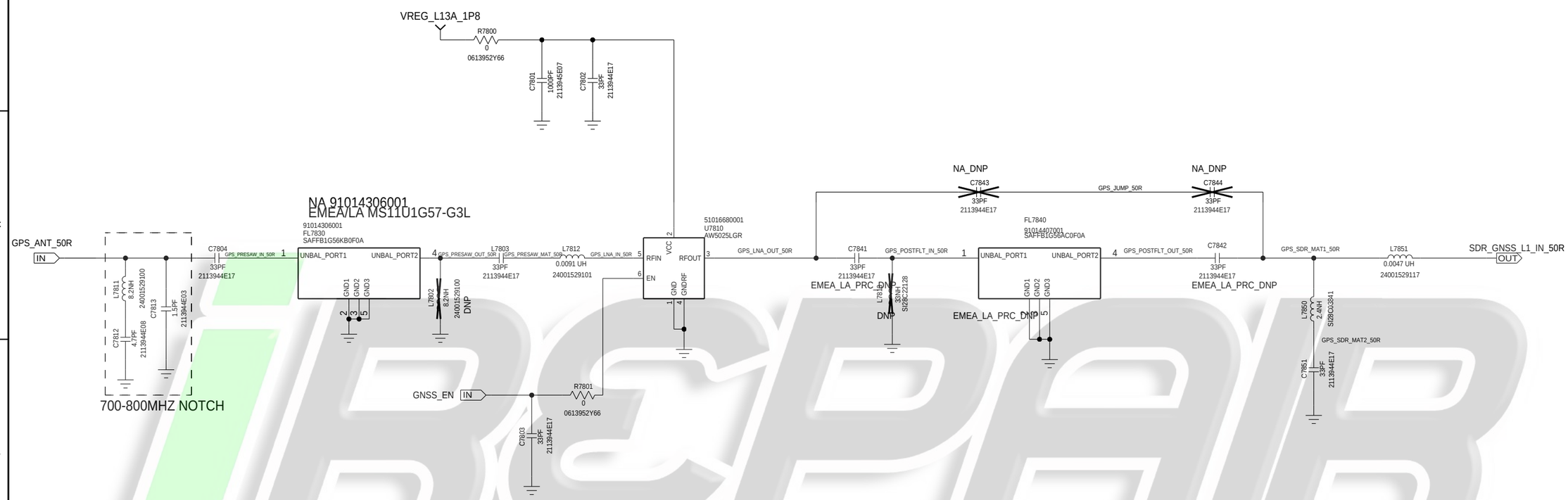

APPROVALS	MOTOROLA MOBILE DEVICES
ENGINEER:	BLOCK TITLE: connectivity
LAST MODIFIED BY: Tue Sep 03 09:48:47 2019	
MOTOROLA CONFIDENTIAL RESTRICTED THE DRAWING ON THIS PRINT AND INFORMATION THEREWITH ARE PROPRIETARY TO MOTOROLA AND SHALL NOT BE USED OR DISCUSSED IN WHOLE OR IN PART WITHOUT MOTOROLA'S CONSENT. © COPYRIGHT, MOTOROLA. THIS DOES NOT IMPLY PUBLICATION	B — PROJECT NAME: sr28c55256_a_191107.cpm — REV: 03
	CAD FILE NAME: — PAGE 60 OF 63

iRepair

WCN3980 RF/CTRL

REF 4600-4699

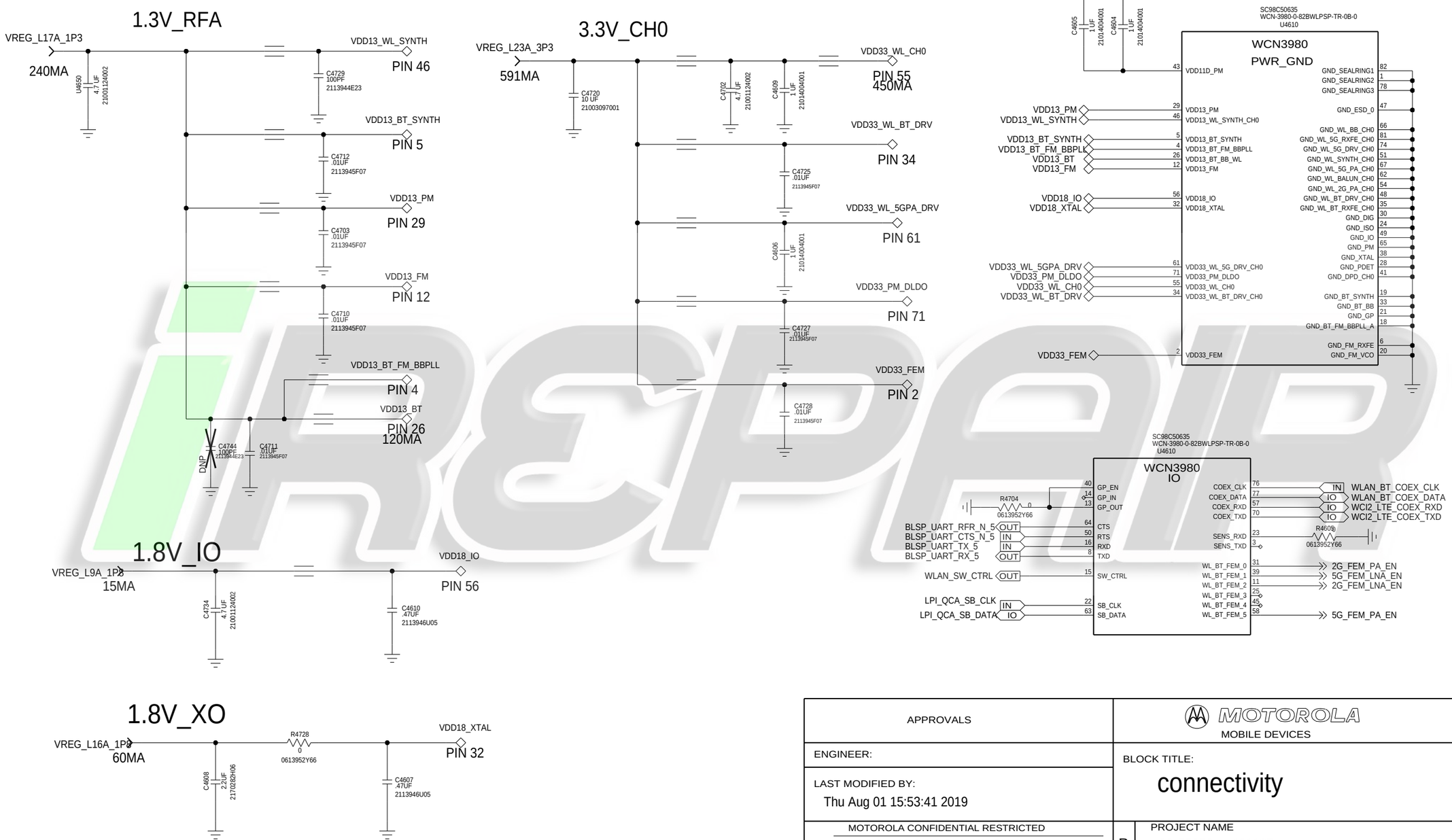

APPROVALS	MOTOROLA MOBILE DEVICES
ENGINEER:	BLOCK TITLE: connectivity
LAST MODIFIED BY: Thu Aug 01 15:53:41 2019	
MOTOROLA CONFIDENTIAL RESTRICTED	B — PROJECT NAME: sr28c55256_a_191107.cpm — REV: 03
	CAD FILE NAME: — PAGE 61 OF 63

THE DRAWING ON THIS PRINT AND INFORMATION THEREWITH ARE PROPRIETARY TO MOTOROLA AND SHALL NOT BE USED OR DISCUSSED IN WHOLE OR IN PART WITHOUT MOTOROLA'S CONSENT.
© COPYRIGHT, MOTOROLA. THIS DOES NOT IMPLY PUBLICATION

WCN3980 POWER AND GND,CONTROL

REF 4700-4799

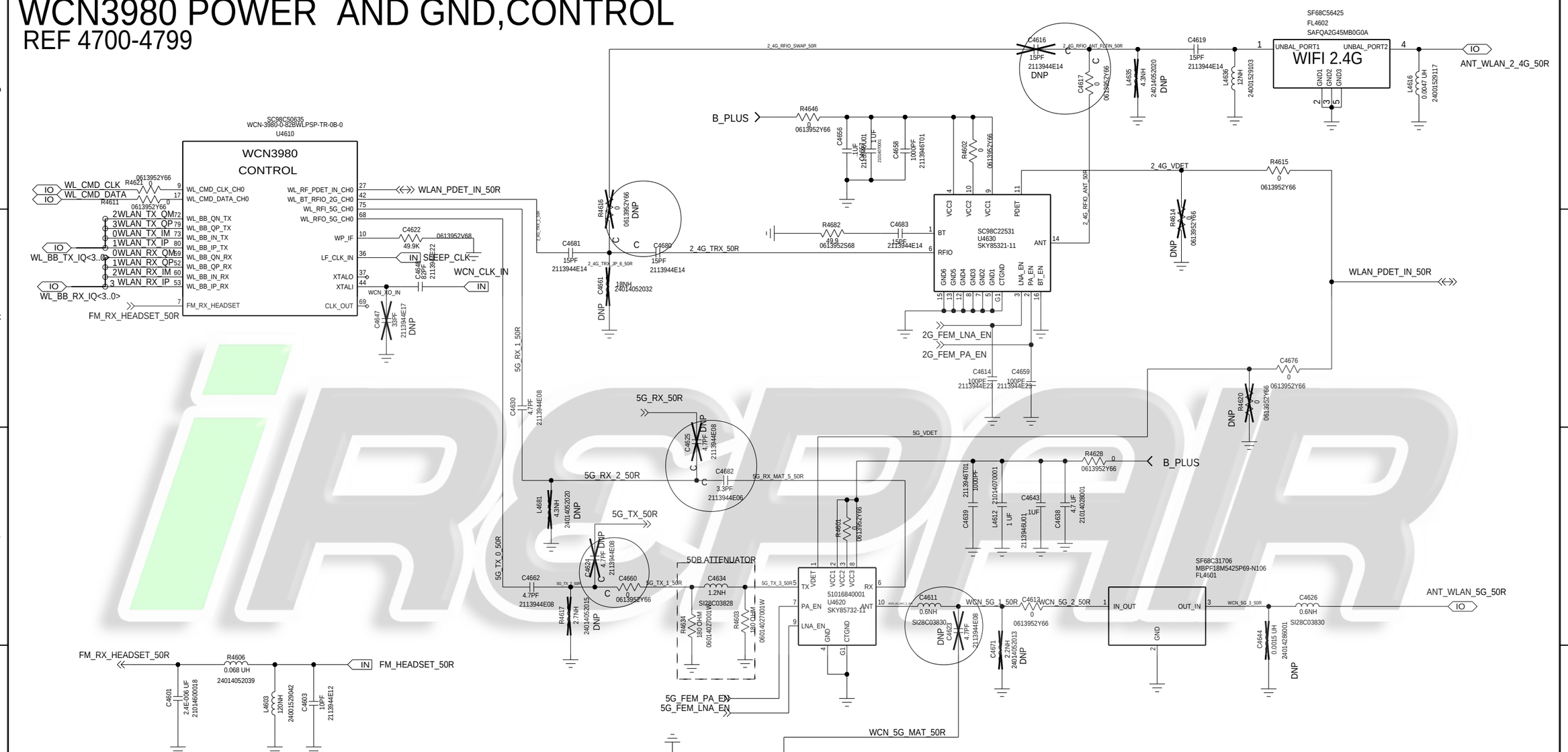

APPROVALS	MOTOROLA MOBILE DEVICES
ENGINEER:	BLOCK TITLE: connectivity
LAST MODIFIED BY: Thu Aug 01 15:53:42 2019	
MOTOROLA CONFIDENTIAL RESTRICTED	B — PROJECT NAME: sr28c55256_a_191107.cpm — REV: 03
THE DRAWING ON THIS PRINT AND INFORMATION THEREWITH ARE PROPRIETARY TO MOTOROLA AND SHALL NOT BE USED OR DISCUSSED IN WHOLE OR IN PART WITHOUT MOTOROLA'S CONSENT. © COPYRIGHT, MOTOROLA. THIS DOES NOT IMPLY PUBLICATION	CAD FILE NAME:
	PAGE 62 OF 63

iRepair

NFC

REF 4100-4199

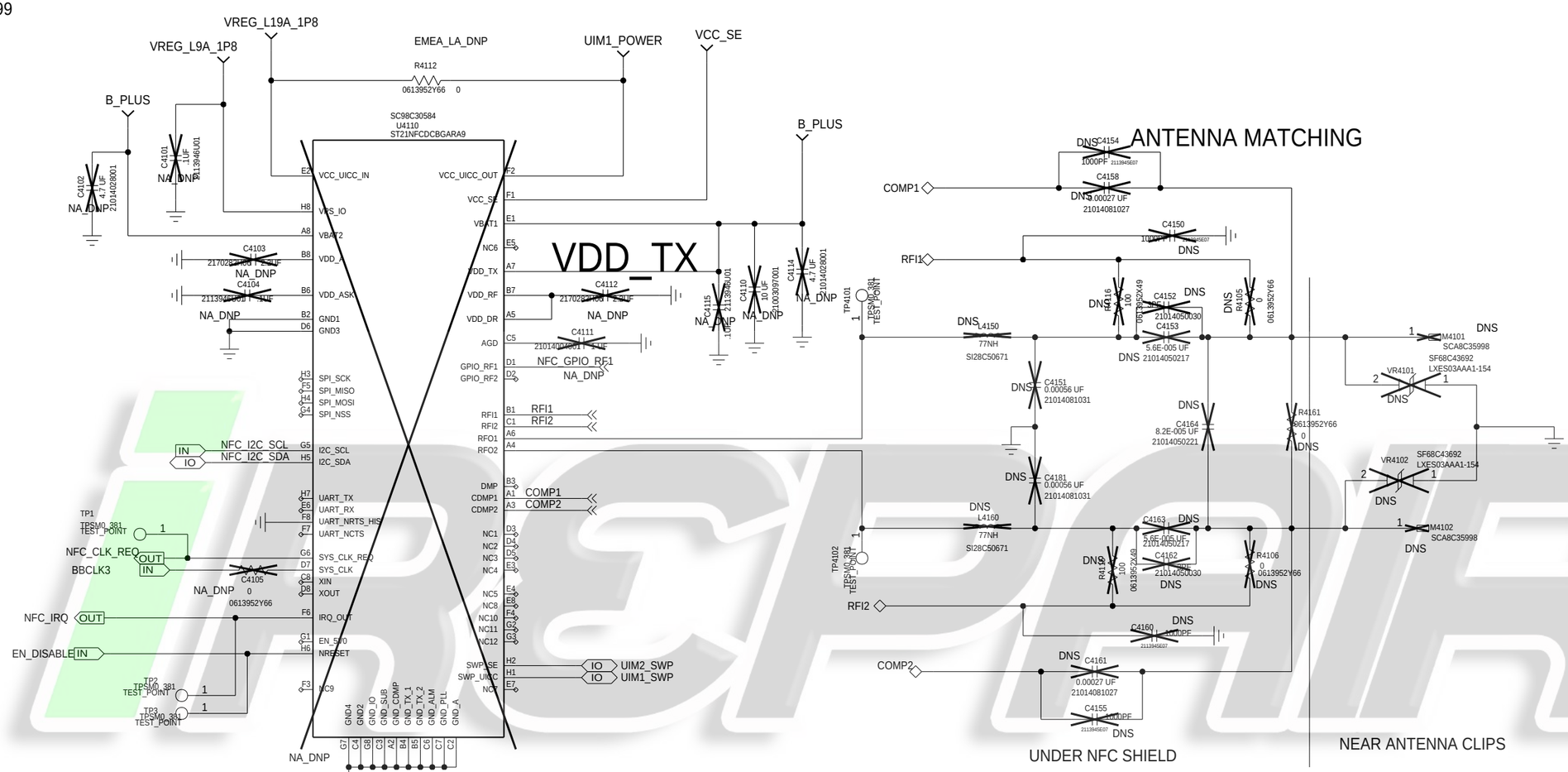

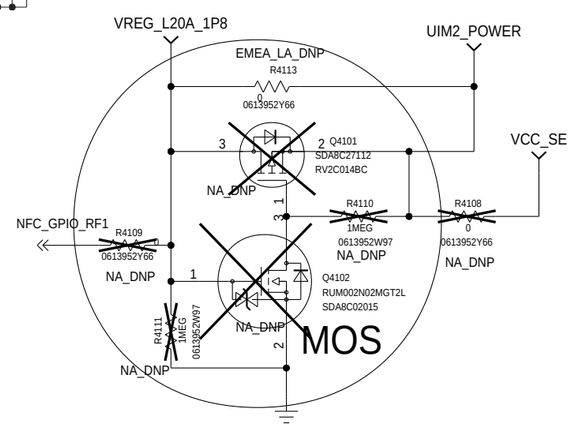

APPROVALS	MOTOROLA MOBILE DEVICES	
ENGINEER:	BLOCK TITLE: nfc	
LAST MODIFIED BY: Thu Aug 01 15:53:19 2019		
MOTOROLA CONFIDENTIAL RESTRICTED	B	PROJECT NAME: sr28c55256_a_191107.cpm — REV: 03
THE DRAWING ON THIS PRINT AND INFORMATION THEREWITH ARE PROPRIETARY TO MOTOROLA AND SHALL NOT BE USED OR DISCUSSED IN WHOLE OR IN PART WITHOUT MOTOROLA'S CONSENT. © COPYRIGHT, MOTOROLA. THIS DOES NOT IMPLY PUBLICATION	CAD FILE NAME:	PAGE 63 OF 63

HREPAIR